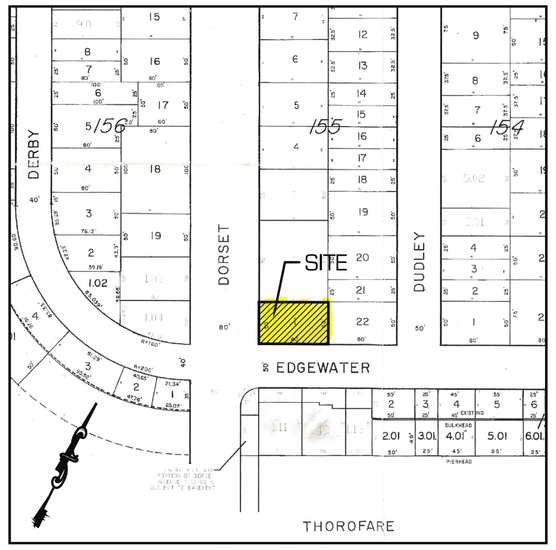

TAX MAP
NOT TO SCALE

OWNERS WITHIN 200 FT

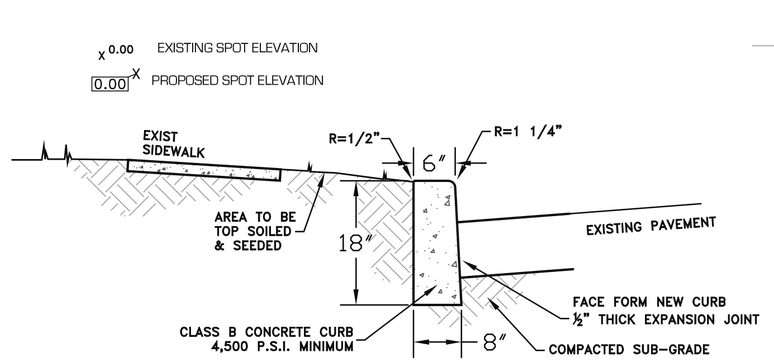

NOTE:
TRAVERSE JOINTS ½" WIDE SHALL BE INSTALLED IN THE CURB 20.0' APART AND SHALL BE FILLED WITH PREFORMED BITUMINOUS FIBER JOINT COMPLYING WITH THE REQUIREMENTS FOR TYPE III FILLER IN AASHO SPECFILLER W-153 RECESSED ½" IN FROM THE FRONT FACE AND TOP OF CURB. EXPANSION JOINTS THRU AND ADJACENT TO THE CURB SHALL BE INCLUDED IN THE UNIT PRICE BID FOR CURB.

CONCRETE CURB
(NOT TO SCALE)

City of Ventnor City
City Hall
6201 Atlantic Avenue
Ventnor City, New Jersey 08406

William Crowther, CTA

Ventnor City Tax Assessor
609-823-7911

December 7, 2020

101 N. Dorset Avenue LLC
49 N. Pelham Avenue
Longport, NJ 08403

Re: Block(s): 155 Lot(s): 1

Dear 101 N. Dorset Avenue LLC,

Pursuant to *N.J.S.A. 40:55D-12*, enclosed please find the certified list of property owners within two hundred feet of the above referenced property.

Also to be included on the notification list is:

Conective Real Estate Department
5100 Harding Highway Suite 399
Mays Landing, NJ 08330

Comcast Cable
901 Leeds Ave
Absecon, NJ 08201

Atlantic County Utilities Authority
PO Box 996
Pleasantville, NJ 08232

SJ Gas Company
1 South Jersey Plaza Rte. 54
Folsom, NJ 08037

If you have any questions regarding this matter, please feel free to contact this office.

Sincerely,

William F. Crowther, CTA
Ventnor City Tax Assessor

ADJACENT PROPERTY LISTING APPLICANT: Block 155 Lot 1
TAXING DISTRICT 22 VENTNOR CITY COUNTY 01 ATLANTIC

PROPERTY ID	PROPERTY LOCATION	CLASS	OWNERS NAME & ADDRESS	
150 1.11	5810 EDGEWATER AVE	4A	SOOY, BARBARA JEAN 5804 EDGEWATER AVE VENTNOR, NJ	08406
150 1.12	5804 EDGEWATER AVE	2	SOOY, BARBARA 5804 EDGEWATER AVE VENTNOR, NJ	08406
150 1.13	5802 EDGEWATER AVE	2	SOOY, BARBARA JEAN 5804 EDGEWATER AVE VENTNOR, NJ	08406
150 2	5800 EDGEWATER AVE 2.01	2	LIPSKI, GERARD & FOX, RANDY 5800 EDGEWATER AVE VENTNOR, NJ	08406
150 3	5710 EDGEWATER AVE 3.01	2	VAN DUYNE, JOHN L SR & THOMAS E 111 N DUDLEY AVE VENTNOR, NJ	08406
150 4	5708 EDGEWATER AVE 4.01	2	VENZIE, ROLF 5708 EDGEWATER AVENUE VENTNOR, NJ	08406
150 5	5706 EDGEWATER AVE 5.01	2	HOWARD, WILLIAM B & ANN MARIE 3089 MANNHEIM AVE MAYS LANDING, NJ	08330
154 1	5709 EDGEWATER AVE	2	SUTOR, CAROL 5709 EDGEWATER AVE VENTNOR, NJ	08406
154 2	103 N DUDLEY AVE	2	PATCH, BARBARA 103 N DUDLEY AVE VENTNOR, NJ	08406
154 3	105 N DUDLEY AVE	2	MATALE, ANTHONY & PATRICIA 5 KINSINGTON CT SEWELL, NJ	08080
154 4	107 N DUDLEY AVE	2	ROSE, SEAN 500 CINDY CR BLUE BELL, PA	19422
154 5.01	111 N DUDLEY AVE	2	VAN DUYNE, THOMAS & BETTY ANN 111 N DUDLEY AVENUE VENTNOR, NJ	08406
154 5.02	113 N DUDLEY AVE	2	VAN DUYNE, CATHERINE & SUSAN 113 N DUDLEY AVE VENTNOR, NJ	08406
155 1	101 N DORSET AVE	4A	101 N DORSET AVE LLC 49 N PELHAM AVE LONGPORT, NJ	08403

ADJACENT PROPERTY LISTING APPLICANT: Block 155 Lot 1
TAXING DISTRICT 22 VENTNOR CITY COUNTY 01 ATLANTIC

PROPERTY ID	PROPERTY LOCATION	CLASS	OWNERS NAME & ADDRESS	
155 2	103 N DORSET AVE	4A	LONDON, CHARLES & LORRAINE 38 ROBERT BEST RD EGG HARBOR TWP, NJ	08234
155 3	107 N DORSET AVE	4A	OWENS SERVICES LLC 5802 BOARDWALK VENTNOR, NJ	08406
155 4	109 N DORSET AVE	4A	SCOTT ROBERT, LLC DBA PC MEDIC 109 N DORSET AVE VENTNOR, NJ	08406
155 5	111 N DORSET AVE	4A	PMK 1 REALTY LLC 318 HAMPSHIRE AVE VENTNOR, NJ	08406
155 15	120 N DUDLEY AVE	2	GOLD, KENNETH & KRISTINA 158 W MASTER STREET PHILADELPHIA, PA	19122
155 16	118 N DUDLEY AVE	2	KELLY, TIMOTHY C 118 N DUDLEY AVE VENTNOR CITY, NJ	08406
155 17	116 N DUDLEY AVE	2	FOTI, ANTHONY & STEPHANIE 112 DIANE AVE DELRAN, NJ	08075
155 18	114 N DUDLEY AVE	2	TOOLAN, WILLIAM 114 N DUDLEY AVE VENTNOR, NJ	08406
155 19	110-112 N DUDLEY AVE	1	110-112 N DUDLEY AVE CONDO ASSN 110-112 N DUDLEY AVE VENTNOR, NJ	08406
155 19 C0001	110 N DUDLEY AVE	2	GALLAGHER, MARGARET 110 N DUDLEY AVE VENTNOR, NJ	08406
155 19 C0002	112 N DUDLEY AVE COB	2	ROONEY, FRANCIS & MCDEVITT, JEANNE 17739 COBBY PLACE PHILADELPHIA, PA	19154
155 20	106-108 N DUDLEY AVE	2	FETTER, VINCENT 106 N DUDLEY AVE 1ST FL VENTNOR, NJ	08406
155 21	104 N DUDLEY AVE	2	CSW, LLC 611 OSBOW DR MYRTLE BEACH, SC	29579
155 22	102 N DUDLEY AVE	1	SOOY, BARBARA 5804 EDGEWATER AVE VENTNOR, NJ	08406

ADJACENT PROPERTY LISTING APPLICANT: Block 155 Lot 1
TAXING DISTRICT 22 VENTNOR CITY COUNTY 01 ATLANTIC

PROPERTY ID	PROPERTY LOCATION	CLASS	OWNERS NAME & ADDRESS	
156 1.02	101 N DERBY AVE	2	VERGA, TRISTA 343 CANTRELL ST PHILADELPHIA, PA	19148
156 1.05	102 N DORSET AVE	4A	HORN, SAMUEL J 102 N DORSET AVE VENTNOR, NJ	08406
156 2	103 N DERBY AVE	2	RYAN, MATTHEW & JOSEPH 642 WALKER RD WAYNE, PA	19428
156 3	107 N DERBY AVE	2	MORGANO, ANTHONY & LOCILLE 107 N DERBY AVE VENTNOR, NJ	08406
156 18	106 N DORSET AVE	4A	DACHER,LLC 608 N DORSET AVE VENTNOR, NJ	08406
156 19	104 N DORSET AVE	1	BLUE WATER CONDO ASSN 104 N DORSET AVE VENTNOR, NJ	08406
156 19 C1	104 N DORSET AVE	2	HILL, JUNE 104 N DORSET AVE. # 1 VENTNOR, NJ	08406
156 19 C2	104 N DORSET AVE	2	LAYTON, GEORGE R.-SR & GAIL 5404 WINCHESTER AVE VENTNOR, NJ	08406
156 19 C3	104 N DORSET AVE	2	ZBROZEK, LINDA 35 COOPER AVE CHERRY HILL NJ	08002
156 19 C4	104 N DORSET AVE	2	ALLEN, GREGORY 7 CHARLES CIRCLE DELANCO, NJ.	08075
156 19 C5	104 N DORSET AVE	2	LAYTON, KEVIN M 104 N DORSET AVE #C5 VENTNOR, NJ	08406
157 1	104 N DERBY AVE 1.01	2	EISENHUT, GUSTAV F 104 N DERBY AVE VENTNOR, NJ	08406
157 2	106 N DERBY AVE 2.01	1	CAWLEY, ROBERT K & TESSA M 7607 CARPET RD TRIPOLI, PA	18066
157 3	110 N DERBY AVE 3.01	2	DELUCA, FRANCIS 234 N CASTELLO PLACE BOISE, ID	83712

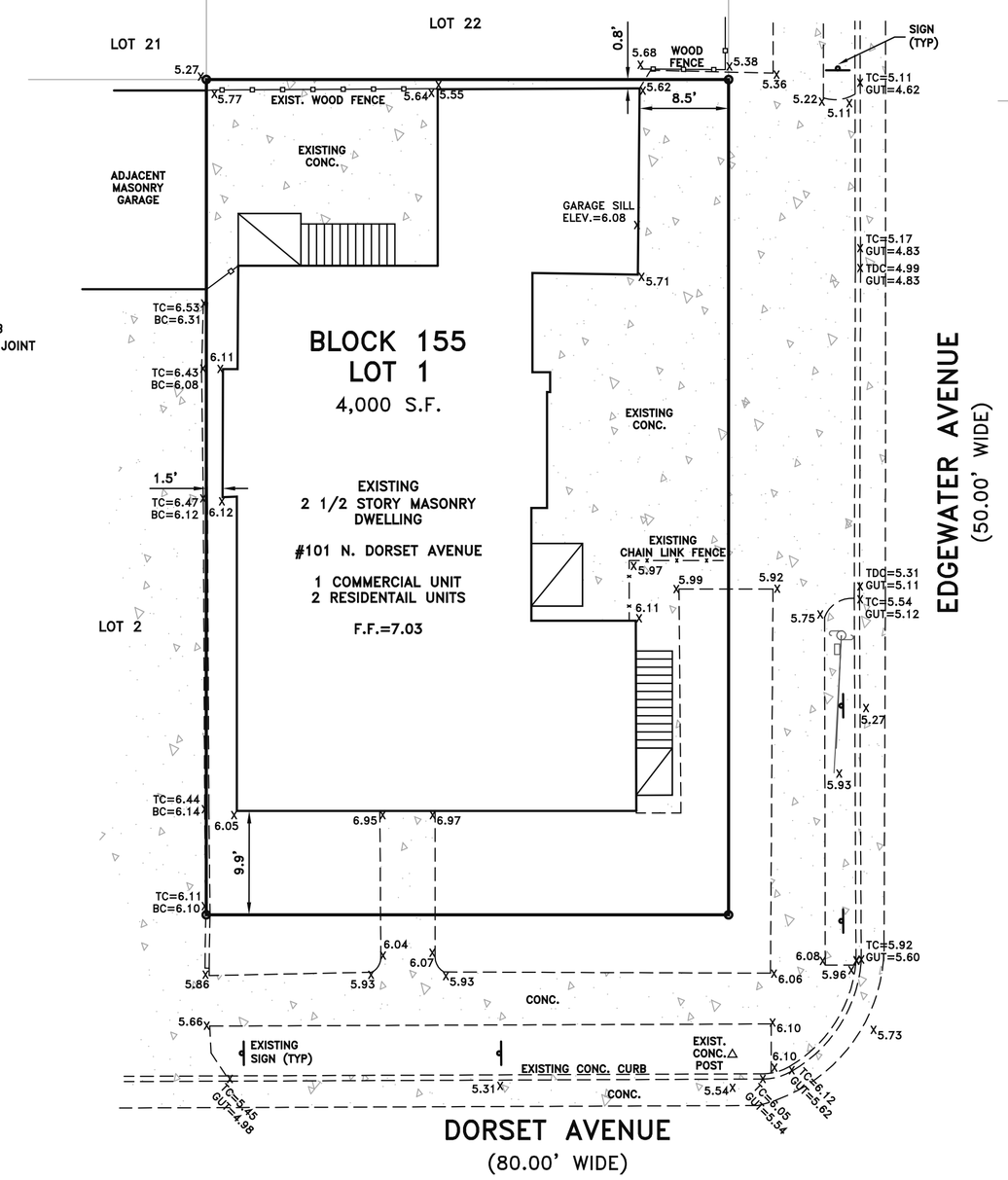

EXISTING CONDITIONS
SCALE: 1"=10'

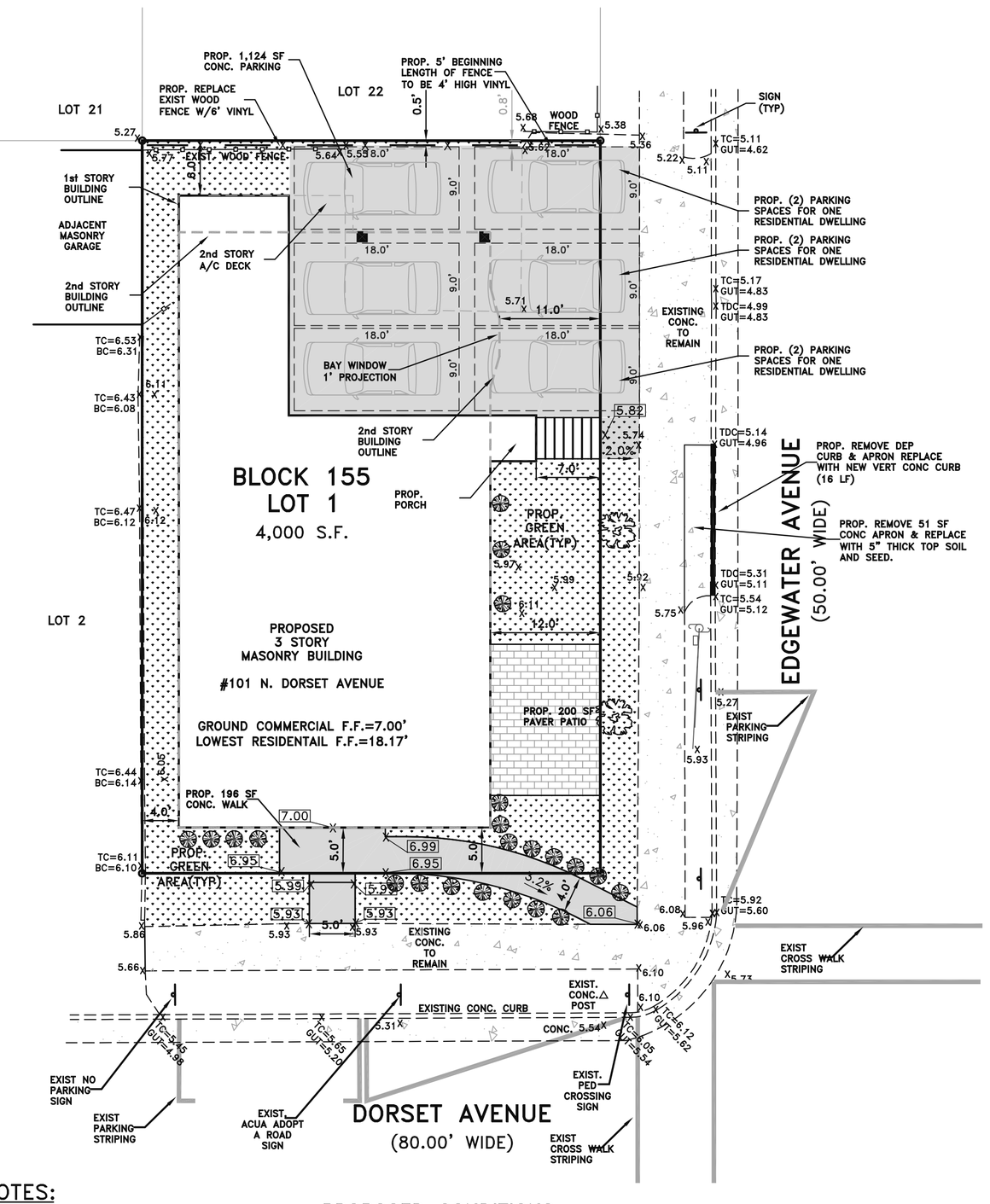

PROPOSED CONDITIONS
SCALE: 1"=10'

TREE LEGEND

SYMBOL	COMMON NAME	BOTANICAL NAME	QTY	SIZE
IC	JAPANESE HOLLY	ILEX CRENATA	22	2'-6" B&B
AR	RED MAPLE	ACER RUBRUM	2	8-10', 2" CAL

(PLANT SUBSTITUTION MUST BE APPROVED BY CITY OF VENTNOR)

ZONE: CITY COMMERCIAL (CC)

CATEGORY:	REQUIRED:	EXISTING:	PROPOSED:	STATUS
LOT AREA	3,000 SF	4,000 SF	4,000 SF	CONFORMING
LOT DEPTH	75 FT	80 FT	80 FT	CONFORMING
LOT WIDTH	40 FT	50 FT	50 FT	CONFORMING
FRONT SETBACK (DORSET) (1)	5 FT	9.9 FT	5.0 FT	CONFORMING
FRONT SETBACK (EDGEWATER) (1)	12 FT	8.5 FT	12.0 FT	CONFORMING
REAR SETBACK	3 FT	1.5 FT	4.0 FT	CONFORMING
SIDE SETBACK	4 FT	0.8 FT	6.0 FT	CONFORMING
BUILDING HEIGHT (2)	35 FT	21.25 FT	30.67 FT	CONFORMING
BUILDING EAVE HEIGHT	MAX 2 FT ABOVE 3rd FLOOR		8 FT	NON-CONFORMING
PARKING (3)	13 SPACES	2 SPACES	6 SPACES	EXIST. NON-CON.
IMPERVIOUS COVERAGE	60% MAX	83.3%	79.7%	EXIST. NON-CON.

(1) PREVAILING SETBACK WITHIN 200 FT
(2) B.F.E. PLUS 4.0 FEET, TO ROOF PEAK
(3) PARKING IS PROVIDED FOR (3) PROPOSED RESIDENTIAL UNITS ONLY. NOT FOR COMMERCIAL USES.

IMPERVIOUS COVERAGE SUMMARY:
- TOTAL IMPERVIOUS COVERAGE IS 3,188 SF

REQUIRED PARKING SUMMARY:
- 1,402 SF COMMERCIAL SPACE: 1 SPACE/200 SF OR 7 SPACES
- RESIDENTIAL PORTION:
  UNIT "A" 3 BR GARDEN APT. 2.1 SPACES
  UNIT "B" 3 BR GARDEN APT. 2.1 SPACES
  UNIT "B" 3 BR GARDEN APT. 2.1 SPACES
- 6 SPACES FOR RESIDENTIAL USE PROVIDED ON-SITE
- 7 SPACES FOR COMMERCIAL USE PROVIDED ON-STREET
- REMOVING A PORTION OF EXIST APRON AND DEPRESSED CURB ON EDGEWATER WILL CREATE AN ADDITIONAL ON-STREET PARKING SPACE

VARIANCES REQUIRED SUMMARY:
- USE VARIANCE TO ALLOW A MIXED USE OF COMMERCIAL AND AND RESIDENTIAL USE WAS GRANTED IN 2018.
- BULK VARIANCE TO ALLOW AN 79.7% IMPERVIOUS COVERAGE WHERE 60% IS PERMITTED.
- BULK VARIANCE TO ALLOW NOT PROVIDING PARKING FOR THE PROPOSED COMMERCIAL USE.
- BULK VARIANCE TO ALLOW EXCEEDING MAX HEIGH OF PROP. EAVE ABOVE 3rd FLOOR.

GENERAL NOTES:

1) APPLICANT / OWNER: RYAN P. SLAVEN
49 N. PELHAM AVE.
LONGPORT, NEW JERSEY 08403

2) THIS PROJECT PROPOSES THE REPLACEMENT OF A PREVIOUSLY APPROVED BUILDING LIFT AND EXPANSION. THE NEWLY PROPOSAL IS TO CREATE TWO FIRST FLOOR COMMERCIAL SPACES AND THREE UPSTAIRS RESIDENTIAL DWELLINGS. THIS MATCHES THE PREVIOUSLY APPROVED PROJECT EXCEPT THAT THE BUILDING IS NEW RATHER THAN RENOVATED AND THE BUILDING FOOTPRINT MADE SIMPLER, APPROPRIATE AND MORE COMPLIANT IN TERMS OF BUILDING SETBACKS THAN THE PREVIOUS APPROVAL.

3) TOTAL LOT AREA = 4,000 SF

4) TRACT IS LOCATED IN ZONE "COMMUNITY COMMERCIAL" , OR CC ZONE.

5) THIS SITE PLAN WAS PREPARED BY REFERENCING SURVEY BY SCHAEFFER NASSAR SCHEIDEGG CONSULTING ENGINEERS, LLC DATED 8-1-18. SIGNED BY HOWARD TRANSUE, PLS.

6) THE PROJECT PROPOSES A TOTAL OF 6 PARKING SPACES FOR THE EXCLUSIVE USE OF THE RESIDENTIAL DWELLINGS PROPOSED ONLY.

7) ALL EROSION CONTROL DESIGN AND CONSTRUCTION TO BE IN ACCORDANCE WITH THE STANDARDS OF SOIL EROSION AND SEDIMENT CONTROL IN NEW JERSEY, 7TH EDITION, JANUARY 2014, REVISED JULY 2017.

8) ALL STORM SEWER DESIGN AND CONSTRUCTION TO BE IN ACCORDANCE WITH STANDARDS SET FORTH BY LATEST NJDOT STANDARDS.

9) ALL ON-SITE CONCRETE SHALL HAVE A MINIMUM COMPRESSIVE STRENGTH OF 4,000 PSI AT 28-DAYS (AASHTO 33-93).

10) TRASH REMOVAL TO BE VIA SEPARATE 95 GALLON CANS THAT WILL BE HAULED BY MUNICIPAL SERVICES. THE CANS ARE TO BE STORED IN THE TRASH AREA DENOTED ON THE ARCHITECTURAL PLANS.

11) ALL LANDSCAPING SHALL BE PLANTED IN ACCORDANCE WITH THE CITY REQUIREMENTS. TO THE EXTENT POSSIBLE,

12) AN INDIVIDUAL MUST BE DESIGNATED AS A SITE SUPERVISOR RESPONSIBLE FOR CONSTRUCTION AND SITE SAFETY 24 HOURS A DAY DURING THE COURSE OF SITE IMPROVEMENT.

13) ALL RUBBISH AND DEBRIS MUST BE REMOVED AND DISPOSED OF IN ACCORDANCE WITH APPLICABLE LOCAL, STATE, AND FEDERAL REGULATIONS.

14) PRIOR TO THE START OF ANY ON-SITE DEMOLITION OR CONSTRUCTION, OR THE SECURING OF APPROPRIATE SIGNATURES ON THE FINAL CONSTRUCTION PLANS, ALL OUTSTANDING BILLS MUST BE SATISFIED AND ALL INSPECTION FEES AND BONDS MUST BE POSTED WITH THE TOWN IN ACCORDANCE WITH ORDINANCE STANDARDS. WE WOULD ALSO ADVISE THAT A PRECONSTRUCTION MEETING BE SCHEDULED BETWEEN THE APPLICANT, OUR OFFICE, THE DESIGN ENGINEER, CONSTRUCTION OFFICIAL AND CONTRACTOR.

15) THE FEMA PRELIMINARY BASE FLOOD ELEVATION FOR THIS SITE IS 9.00 FEET NAVD 88. WITH THE ORDINANCE REQUIRED 3.00 FEET OF FREEBOARD REQUIRED, THE DESIGN FLOOD ELEVATION IS 12.00 NAVD 88 (ONLY APPLICABLE TO THE RESIDENTIAL UNITS). THE PROPOSED LOWEST FINISH FLOOR ELEV. FOR THE PROPOSED RESIDENTIAL USE IS 18.17 FEET NAVD 88, WHICH COMPLIES WITH ORDINANCE AND FEMA REQUIRMENTS. THE PROPOSED COMMERCIAL PORTION OF THE USE ON THE FIRST FLOOR IS SUBJECT TO FEMA "FLOOD PROOFING" MEASURES, BUT NOT THE DESIGN FLOOD ELEVATION REQUIREMENTS.

16) ALL EXISTING UTILITY CONNECTIONS TO BE UTILIZED FOR THE PROPOSED BUILDING.

17) THE PROPOSED IMPROVEMENTS WILL NOT CHANGE THE DRAINAGE PATTERNS THAT CURRENTLY EXIST FOR THE CURRENT SITE CONDITIONS. SHOULD THE IMPROVEMENTS CHANGE THE EXISTING RUNOFF PATTERN, A GRADING AND DRAINAGE PLAN WILL BE SUBMITTED FOR REVIEW BY THE ZONING BOARD ENGINEER.

PLANS FOR PERMIT PURPOSES ONLY

ZONING BOARD APPROVALS

CHAIRMAN DATE

SECRETARY DATE

ENGINEER DATE

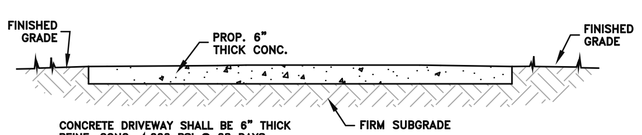

CONCRETE DRIVEWAY DETAIL
(NOT TO SCALE)

Schaeffer Nassar Scheidegg
CONSULTING ENGINEERS, LLC
Surveyors • Environmentalists • Planners
1425 Cantillon Boulevard • Mays Landing • New Jersey
Telephone: (609) 625-7400 • Fax: (609) 909-0253
Certificate of Authorization #24GA28103800

THIS PLAN IS NULL AND VOID UNLESS THE RAISED IMPRINTED SEAL OF THE SIGNING ENGINEER IS AFFIXED HERETO.

ANDREW F. SCHAEFFER
PROFESSIONAL ENGINEER
NEW JERSEY LIC. NO. 32893
DATE

REV #	DATE:	BY:	REVISION DESCRIPTION

COPYRIGHT AND USE OF DOCUMENTS
THIS DOCUMENT, AND THE IDEAS AND DESIGNS INCORPORATED HEREIN, AS AN INSTRUMENT OF PROFESSIONAL SERVICE, IS THE PROPERTY OF SCHAEFFER NASSAR SCHEIDEGG CONSULTING ENGINEERS, LLC AND IS NOT TO BE USED, IN WHOLE OR IN PART, FOR ANY OTHER PROJECT WITHOUT WRITTEN AUTHORIZATION BY SCHAEFFER NASSAR SCHEIDEGG CONSULTING ENGINEERS, LLC.

VARIANCE PLAN FOR:
RYAN P. SLAVEN
101 N. DORSET AVENUE BLOCK 155, LOT 1
CITY OF VENTNOR, ATLANTIC COUNTY, NEW JERSEY
ZONE: "CITY COMMERCIAL", TAX MAP SHEET 26

DATE	12-14-20
SCALE	1"=10'
BY	BG
CHECKED	AFS
SHEET NO.	1 OF 1

FILE# 18-273