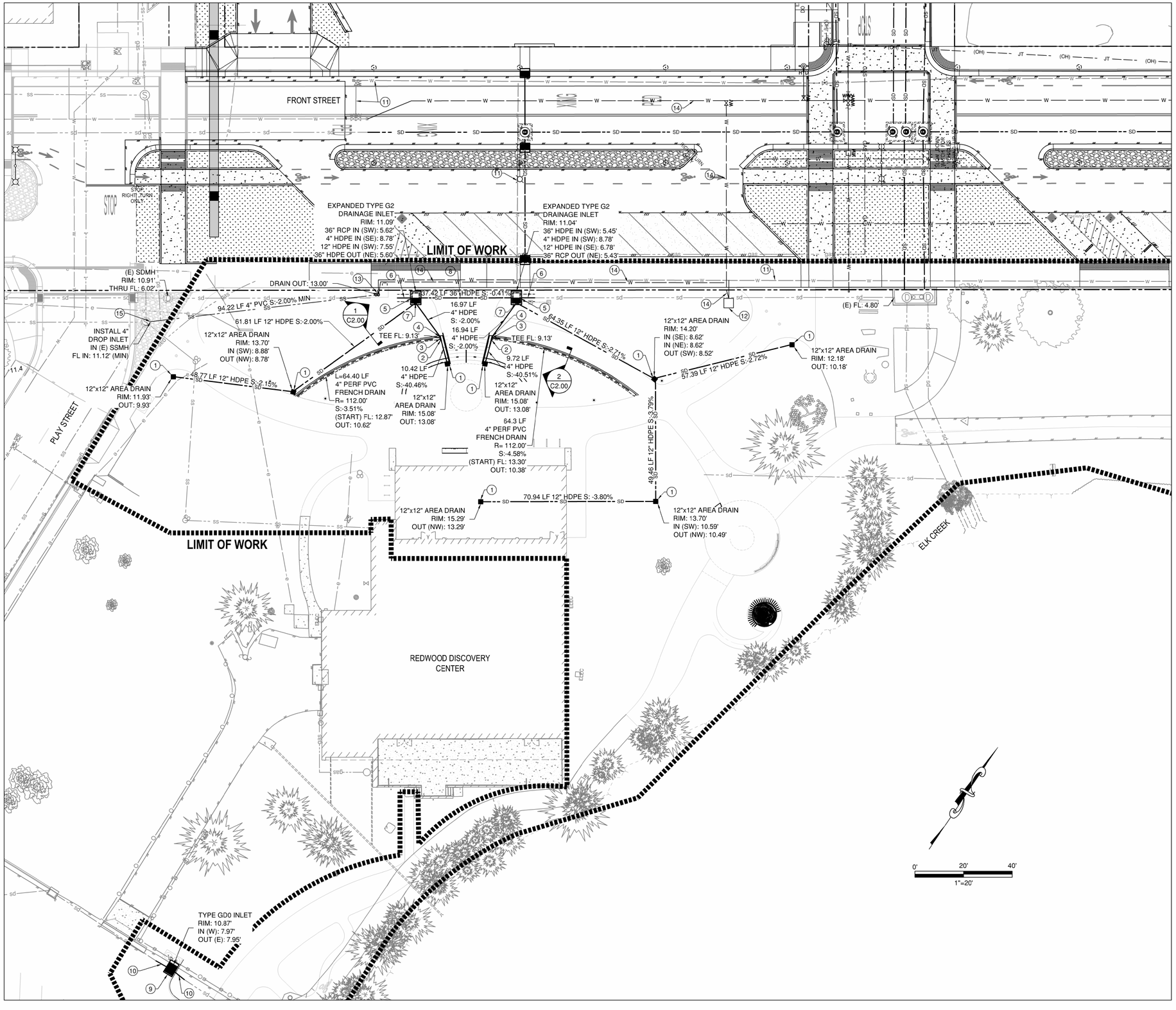

GENERAL NOTES

1. UTILITIES SHOWN AS NEW IN FRONT STREET AND BEYOND ARE PART OF THE FRONT STREET IMPROVEMENT PROJECT OCCURRING SIMULTANEOUSLY TO THIS ONE. AS SUCH, THEY SHOULD NOT BE CONSIDERED AS A PART OF THIS PROJECT. ADDITIONALLY, THESE UTILITIES MAY OR MAY NOT BE INSTALLED AT THE TIME THIS PROJECT BEGINS CONSTRUCTION.
2. GRATED LINE DRAINS MATCH WALKWAY GRADING AND CROSS SLOPES SHOWN ON L6.01 GRADING PLAN.
3. FRENCH DRAINS IN PLANTER AREAS MATCH GRADING SHOWN ON L6.01 GRADING PLAN.

KEY NOTES

1. 12"x12" AREA DRAINAGE INLET. SEE DETAILS ON SHEET C2.10.
2. 4" HDPE 45° ELBOW TO VERTICAL TEE.
3. 4" HDPE 90° ELBOW DOWN TO 4" HDPE VERTICAL TEE AT FRENCH DRAIN CONNECTION OUT.
4. 4" 22.5° ELBOW FROM VERTICAL TEE.
5. CALTRANS EXPANDED TYPE G2 INLET. SEE DETAIL 3/C2.00 & SHEET C2.20.
6. REPLACEMENT 36"Ø RCP RECONNECTED TO EXISTING 36"Ø RCP. LENGTH VARIES, USE EXISTING PIPE JOINT FOR CONNECTION.
7. VERTICALLY SEPARATED 4" HDPE AND 12" HDPE INVERT PENETRATIONS.
8. 36"Ø HDPE BETWEEN NEW EXPANDED TYPE G2 DRAIN INLETS.
9. CALTRANS TYPE GDO INLET. SEE SHEETS C2.10 & C2.20.
10. REPLACEMENT 24"Ø RCP RECONNECTED TO EXISITNG 24"Ø RCP. LENGTH VARIES, USE EXISTING PIPE JOINT FOR CONNECTION.
11. EXISTING WATER MAIN TO BE DEMOLISHED IN FRONT STREET PROJECT.
12. WATER METER. SEE IRRIGATION PLAN FOR IMPROVEMENTS.
13. DRINKING FOUNTAIN. SEE SERVICE CONNECTION NOTE BELOW.
14. REPLACEMENT WATER MAIN IN FRONT STREET PROJECT. SERVICE CONNECTIONS TO BE REPLACED IF INSTALLED PRIOR TO FRONT STREET PROJECT WATER MAIN REPLACEMENT.
15. INSTALL 4" PVC DROP INLET TO EXISTING SANITARY SEWER MANHOLE. SLOPE SHOWN AT 2.00% MINIMUM. FIELD VERIFY CROSSING DEPTHS PRIOR TO INSTALLATION AND LOWER INVERT IF NECESSARY. SEE DETAIL 4/C2.00.

GREEN WORKS
LANDSCAPE ARCHITECTURE
ENVIRONMENTAL DESIGN
110 SE Main St., Suite 100
Portland, OR 97214
Ph: 503 222 5612
Fax: 503 222 2283
Email: info@greenworkspc.com

STOVER ENGINEERING
Civil Engineers and Consultants
PO BOX 783 - 711 H STREET
CRESCENT CITY, CA 95531 707-465-6742

VERIFY SCALE: DRAWINGS ARE TO SCALE IF BAR MEASURES 1"
0" 1/2" 1"

CITY OF CRESCENT CITY CALIFORNIA 1854

Project: Beachfront Park Clean CA

City of Crescent City
377 J STREET
CRESCENT CITY, CA, 95531
707-464-9506
ewier@crescentcity.org

Submittal: Bid Set

Sheet Title: Utility Plan

© GREENWORKS, P.C.
2024, ALL RIGHTS RESERVED

THESE DRAWINGS ARE THE PROPERTY OF GREENWORKS, P.C., AND ARE NOT TO BE USED OR REPRODUCED IN ANY MANNER, EXCEPT WITH THE PRIOR WRITTEN PERMISSION OF GREENWORKS, P.C.

Date:	05/09/2025
Revisions:	
Drawn By:	GLH
Checked By:	RCY
Job No.	220065
Approved:	

REGISTERED PROFESSIONAL ENGINEER
RYAN YOUNG
No. 67604
CIVIL
STATE OF CALIFORNIA
5/9/25

C1.00

Sheet No. of

S:\4921 GREENWORKS CC GATEWAY IMPROVEMENTS\CIVIL\DDW\S\20250507 - 4921 - CLEAN CA PROJECT.DWG

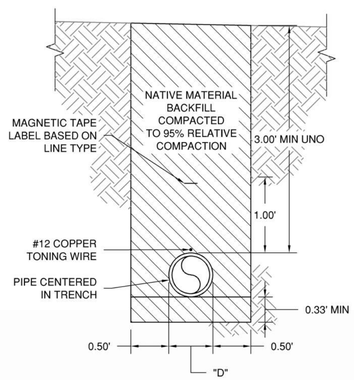

1 STORM DRAIN TRENCH SECTION
1"=1'-0"

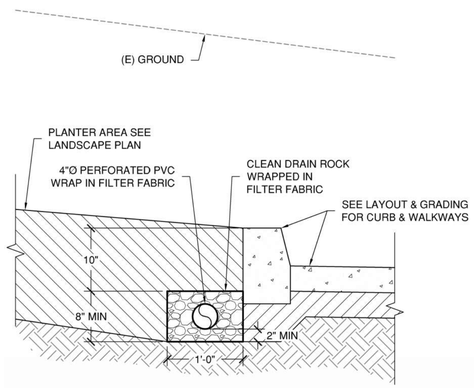

2 PLANTER DRAIN SECTION
1"=1'-0"

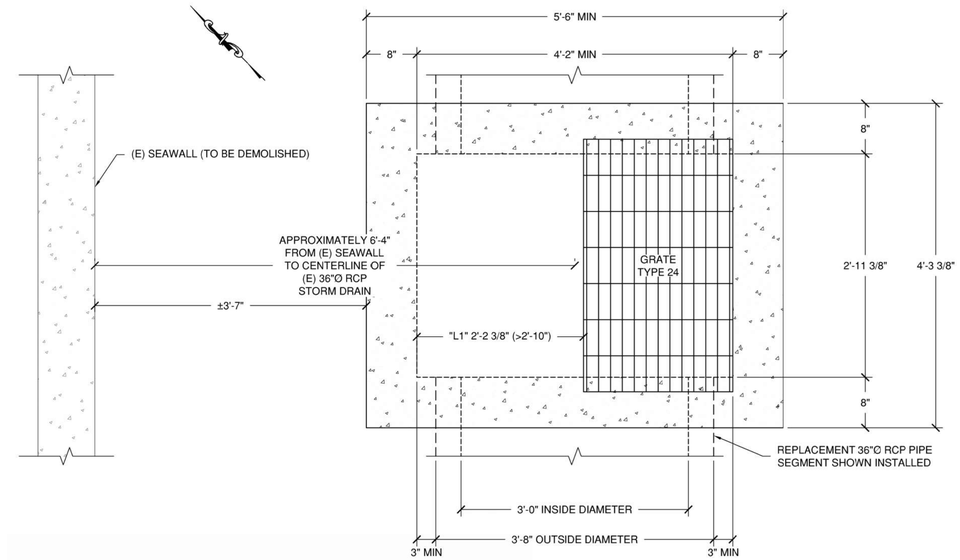

SEE CALTRANS STANDARD PLANS ON SHEET C2.20

3 EXPANDED TYPE G2 DRAINAGE INLET
1"=1'-0"

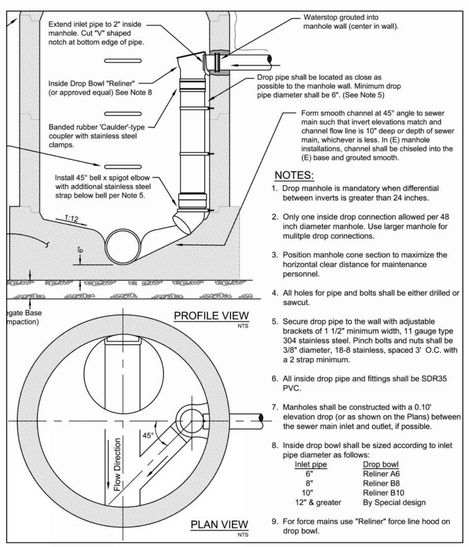

NOTES:

1. Drop manhole is mandatory when differential between inverts is greater than 24 inches.
2. Only one inside drop connection allowed per 48 inch diameter manhole. Use larger manhole for mulitple drop connections.
3. Position manhole cone section to maximize the horizontal clear distance for maintenance personnel.
4. All holes for pipe and bolts shall be either drilled or sawcut.
5. Secure drop pipe to the wall with adjustable brackets of 1 1/2" minimum width, 11 gauge type 304 stainless steel. Pinch bolts and nuts shall be 3/8" diameter, 18-8 stainless, spaced 3' O.C. with a 2 strap minimum.
6. All inside drop pipe and fittings shall be SDR35 PVC.
7. Manholes shall be constructed with a 0.10' elevation drop (or as shown on the Plans) between the sewer main inlet and outlet, if possible.
8. Inside drop bowl shall be sized according to inlet pipe diameter as follows:

Inlet pipe	Drop bowl
6"	Reliner A6
8"	Reliner B8
10"	Reliner B10
12" & greater	By Special design

9. For force mains use "Reliner" force line hood on drop bowl.

4 NEW DROP INLET AT (E) SSMH
NTS

HATCH LEGEND

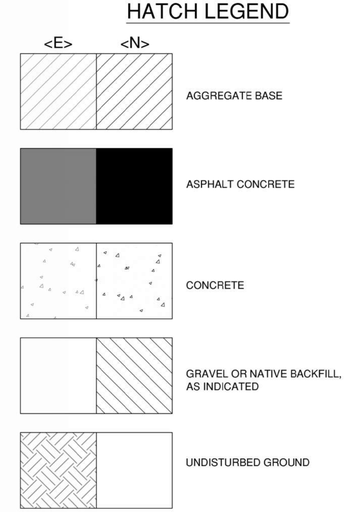

REGISTERED PROFESSIONAL ENGINEER
RYAN YOUNG
No. 67604
CIVIL
STATE OF CALIFORNIA
5/7/25

GREEN WORKS
LANDSCAPE ARCHITECTURE
ENVIRONMENTAL DESIGN
110 SE Main St., Suite 100
Portland, OR 97214
Ph: 503 222 5612
Fax: 503 222 2283
Email: info@greenworkspc.com

STOVER ENGINEERING
Civil Engineers and Consultants
PO BOX 783 - 711 H STREET
CRESCENT CITY, CA 95531 707-465-6742

VERIFY SCALE: DRAWINGS ARE TO SCALE IF BAR MEASURES 1"
0" 1/2" 1"

Project:
Beachfront Park
Clean CA
City of Crescent City
377 J STREET
CRESCENT CITY, CA, 95531
707-464-9506
ewier@crescentcity.org

Submittal: Bid Set
Sheet Title: **Utility Details**

© GREENWORKS, P.C.
2024, ALL RIGHTS RESERVED
THESE DRAWINGS ARE THE PROPERTY OF GREENWORKS, P.C., AND ARE NOT TO BE USED OR REPRODUCED IN ANY MANNER, EXCEPT WITH THE PRIOR WRITTEN PERMISSION OF GREENWORKS, P.C.

Date: 05/09/2025
Revisions:

Drawn By: GLH
Checked By: RCY
Job No. 220065
Approved:

C2.00
Sheet No. of

S:\4921 GREENWORKS CC GATEWAY IMPROVEMENTS\CIVIL\DDWG\2025\0311 - 4921 - CLEAN CA PROJECT.DWG

NOTES

- FOR COMPLETE DESIGN AND PRODUCT INFORMATION CONTACT JENSEN PRECAST.

BILL OF MATERIALS

ITEM	QTY	PART NUMBER	DESCRIPTION
1	3.982 ft^3	100011425	CONCRETE MIX GENERIC 5000 PSI
2	4	100002854	INSERT MH RUNG PLASTIC SP SOCKET
3	1	100005551	GRATE FRAME 1212-H STEEL SBF E0036G TRF B/D GALV
5	1	100018826	REINFORCING MAT 100018826

100000956.dwg

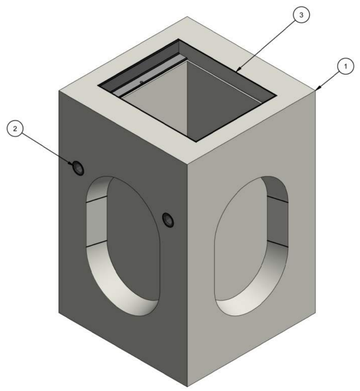

ISO LAYOUT

LIFTING NOTES

- PLANT DEMOLDING & FIELD INSTALLATION: MINIMUM HANDLING CONCRETE STRENGTH F'c = 3000 PSI RIGGING EQUALIZER REQUIRED TO EQUALIZE LOAD TO 2 LIFTING POINTS WITH A SLING ANGLE BETWEEN 60 AND 90 DEGREES

CHANGE HISTORY

NO.	DESCRIPTION	DATE	BY
1	DRAWING CREATED	12/2/2020	CMK

BURY DEPTH:	0.0' - 0.0' to Top		
WATER LEVEL:	5.0'	APPROX. WEIGHT:	608.34 Lbs
DESIGN SPEC:	ASTM C890,ACI 318	LOADING SPEC:	A-16 (AASHTO HS20-44)
REINFORCEMENT TYPE:	Rebar	LIFTING TYPE:	SP Socket

JENSEN PRECAST EST. 1968
WWW.JENSENPRECAST.COM

©2022 Jensen Precast. All rights reserved.
All materials appearing as Jensen Precast documents and the like are proprietary work product and are protected under U.S. copyright and other laws.
Unless in conjunction with business conducted with Jensen Precast, any use of Jensen Precast work product without express, written consent is prohibited, and recipient is prohibited from distributing any and all work product to non-approved third parties under penalty of civil action.

DESCRIPTION:	Drainage 1212x24 Rect. Bottom Section Knockout Cast-In Frame		REV: B-1
	CASTING LAYOUT		SHEET: 1 OF 3
PART NUMBER: 100000956	DRAWN BY: E. Fine		
CREATED: 10/13/2017	MODIFIED: 3/8/2022		

1 12"x12" AREA DRAINAGE INLET

NTS

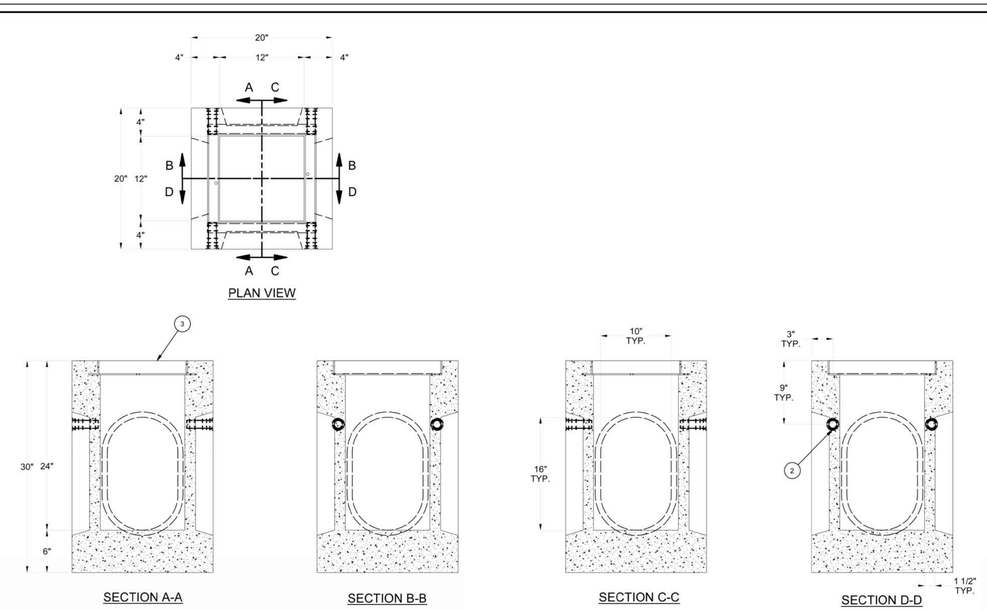

100000956.dwg

BURY DEPTH:	0.0' - 0.0' to Top		
WATER LEVEL:	5.0'	APPROX. WEIGHT:	608.34 Lbs
DESIGN SPEC:	ASTM C890,ACI 318	LOADING SPEC:	A-16 (AASHTO HS20-44)
REINFORCEMENT TYPE:	Rebar	LIFTING TYPE:	SP Socket

JENSEN PRECAST EST. 1968
WWW.JENSENPRECAST.COM

©2022 Jensen Precast. All rights reserved.
All materials appearing as Jensen Precast documents and the like are proprietary work product and are protected under U.S. copyright and other laws.
Unless in conjunction with business conducted with Jensen Precast, any use of Jensen Precast work product without express, written consent is prohibited, and recipient is prohibited from distributing any and all work product to non-approved third parties under penalty of civil action.

DESCRIPTION:	Drainage 1212x24 Rect. Bottom Section Knockout Cast-In Frame		REV: B-1
	CASTING DRAWING		SHEET: 2 OF 3
PART NUMBER: 100000956	DRAWN BY: E. Fine		
CREATED: 10/13/2017	MODIFIED: 3/8/2022		

2 12"x12" AREA DRAINAGE INLET

NTS

- ALL CONCRETE TO HAVE A 28 DAY COMPRESSIVE STRENGTH OF 5000 PSI.
- REINFORCING STEEL SHALL COMPLY WITH ASTM A615 GRADE 60 OR ASTM A706 GRADE 60. BAR BENDING AND PLACEMENT SHALL COMPLY WITH THE LATEST ACI STANDARD. EQUIVALENT AREA WELDED WIRE REINFORCEMENT CAGES MAY BE UTILIZED IN LIEU OF GRADE 60 REINFORCING BARS.
- WELDED WIRE REINFORCEMENT SHALL COMPLY WITH ASTM A1064 GRADE 80 STANDARDS
- LIFTING INSERTS FOR HANDLING SHALL BE INSTALLED PER MANUFACTURER'S REQUIREMENTS.
- BURY DEPTH 0.0' - 0.0' TO Top
- WATER LEVEL: 5.0'
- DESIGN SPECIFICATION: ASTM C890,ACI 318
- LOADING SPECIFICATION: A-16 (AASHTO HS20-44)
- SOIL UNIT WEIGHT DRY - 110 lbs/cu.ft.
- EQUIVALENT LATERAL PRESSURE DRY - 40 lbs/cu.ft.
- SOIL UNIT WEIGHT WET - 120 lbs/cu.ft.
- EQUIVALENT LATERAL PRESSURE WET - 80 lbs/cu.ft.

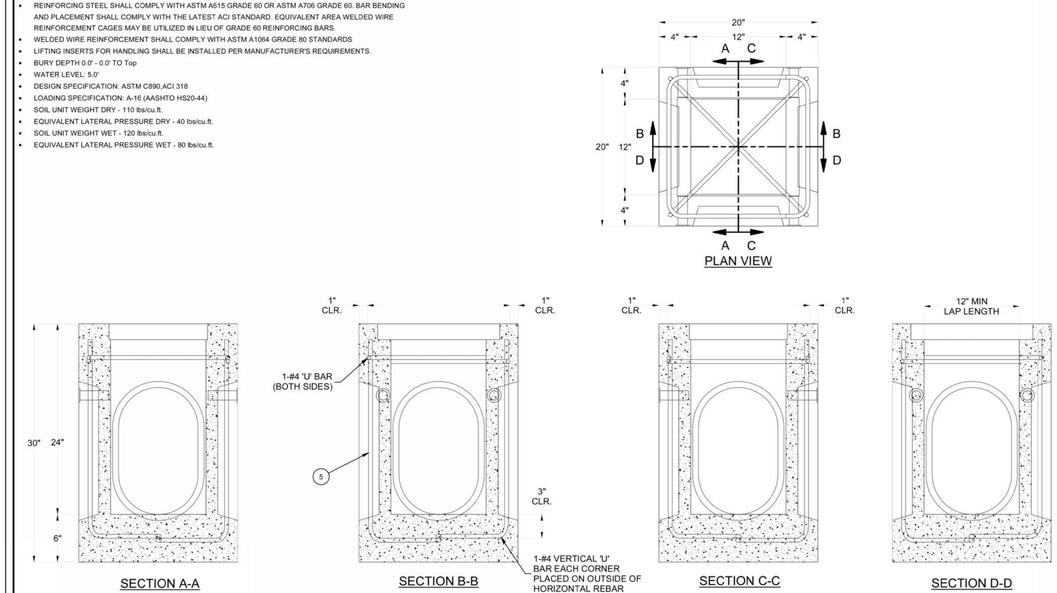

100000956.dwg

BURY DEPTH:	0.0' - 0.0' to Top		
WATER LEVEL:	5.0'	APPROX. WEIGHT:	608.34 Lbs
DESIGN SPEC:	ASTM C890,ACI 318	LOADING SPEC:	A-16 (AASHTO HS20-44)
REINFORCEMENT TYPE:	Rebar	LIFTING TYPE:	SP Socket

JENSEN PRECAST EST. 1968
WWW.JENSENPRECAST.COM

©2022 Jensen Precast. All rights reserved.
All materials appearing as Jensen Precast documents and the like are proprietary work product and are protected under U.S. copyright and other laws.
Unless in conjunction with business conducted with Jensen Precast, any use of Jensen Precast work product without express, written consent is prohibited, and recipient is prohibited from distributing any and all work product to non-approved third parties under penalty of civil action.

DESCRIPTION:	Drainage 1212x24 Rect. Bottom Section Knockout Cast-In Frame		REV: B-1
	REINFORCING CAGE REVIEW		SHEET: 3 OF 3
PART NUMBER: 100000956	DRAWN BY: E. Fine		
CREATED: 10/13/2017	MODIFIED: 3/8/2022		

3 12"x12" AREA DRAINAGE INLET

NTS

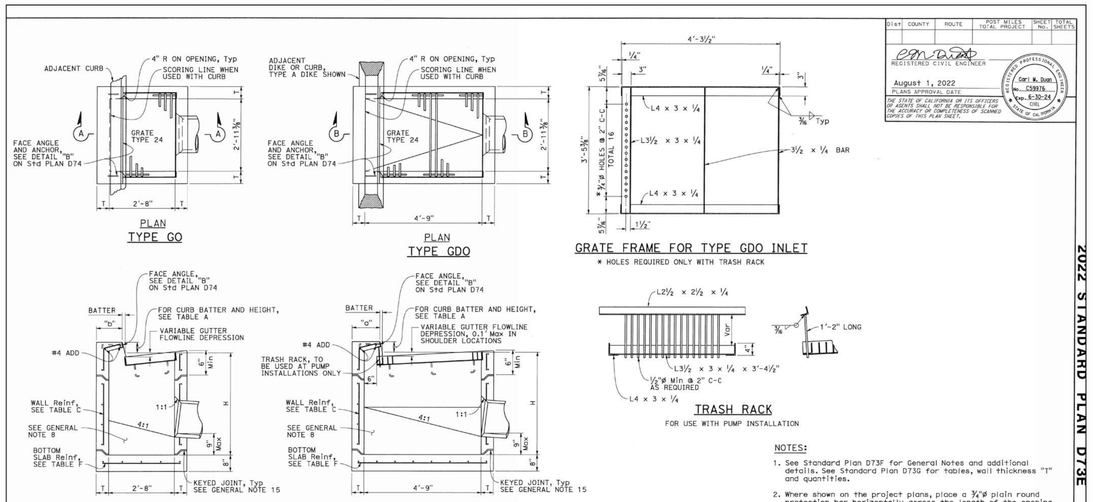

CURB TYPE	NORMAL CURB HEIGHT	CURB BATTER	"a" DIMENSION	"b" DIMENSION
A1-6	6"	1½"	T+7½"	T+6½"
A1-8	8"	2"	T+7"	T+6"
B1-6	6"	4"	T+5"	T+4"
TYPE A DIKE	6"	3"	T+6"	T+5"

Height of curb opening will vary with the type of curb and the depth of the local depression.

NOTES:

1. See Standard Plan D73F for General Notes and additional details. See Standard Plan D73G for tables, wall thickness "T" and quantities.
2. Where shown on the project plans, place a ¾"ø plain round protection bar horizontally across the length of the opening and bend back 4" into the inlet wall on each side.
3. Complete joint penetration butt welds may be substituted for the fillet welds on all anchors.
4. Standard square, hexagon, round or equivalent headed anchors may be substituted for the right angle hooks on the anchors shown on this plan.

Dist	COUNTY	ROUTE	POST MILES: TOTAL PROJECT	SHEET No.	TOTAL SHEETS

REGISTERED CIVIL ENGINEER
August 1, 2022
PLANS APPROVAL DATE
Carl W. Dyer
C53976
Exp. 6-30-25
CIVIL
REGISTERED PROFESSIONAL ENGINEER
THE STATE OF CALIFORNIA OR ITS OFFICERS OR AGENTS SHALL NOT BE RESPONSIBLE FOR THE ACCURACY OR COMPLETENESS OF SCANNED COPIES OF THIS PLAN SHEET.

STATE OF CALIFORNIA
DEPARTMENT OF TRANSPORTA

PRECAST DRAINAGE INLETS TYPES GO AND

NO SCALE

REGISTERED PROFESSIONAL ENGINEER
RYAN YOUNG
No. 67604
CIVIL
STATE OF CALIFORNIA
5/7/25

2022 STANDARD PLAN D73E

PRECAST DRAINAGE INLETS TYPES GO AND GDO

NTS

GREEN WORKS
LANDSCAPE ARCHITECTURE
ENVIRONMENTAL DESIGN
110 SE Main St., Suite 100
Portland, OR 97214
Ph: 503 222 5612
Fax: 503 222 2283
Email: info@greenworkspc.com

STOVER ENGINEERING
Civil Engineers and Consultants
PO BOX 783 - 711 H STREET
CRESCENT CITY, CA 95531 707-465-6742

VERIFY SCALE: DRAWINGS ARE TO SCALE IF BAR MEASURES 1"
0" 1/2" 1"

CITY OF CRESCENT CITY CALIFORNIA 1854

Project: Beachfront Park Clean CA
City of Crescent City
377 J STREET
CRESCENT CITY, CA, 95531
707-464-9506
ewier@crescentcity.org

Submittal: Bid Set

Sheet Title: **Storm Drain Details**

© GREENWORKS, P.C. 2024, ALL RIGHTS RESERVED
THESE DRAWINGS ARE THE PROPERTY OF GREENWORKS, P.C., AND ARE NOT TO BE USED OR REPRODUCED IN ANY MANNER, EXCEPT WITH THE PRIOR WRITTEN PERMISSION OF GREENWORKS, P.C.

Date: 05/09/2025
Revisions:

Drawn By: GLH
Checked By: RCY
Job No. 220065
Approved:

C2.10
Sheet No. of

S:\4921 GREENWORKS CC GATEWAY IMPROVEMENTS\CIVIL\DDW\2025\2025\11 - 4921 - CLEAN CA PROJECT.DWG

S:\4921 GREENWORKS CC GATEWAY IMPROVEMENTS\CIVIL3D\DWG\20250311 - 4921 - CLEAN CA PROJECT.DWG

205

Dist	COUNTY	ROUTE	POST MILES TOTAL PROJECT	SHEET No.	TOTAL SHEETS

REGISTERED CIVIL ENGINEER – Carl M. Duan, No. C59976, Exp. 6-30-24, CIVIL, STATE OF CALIFORNIA

August 1, 2022
PLANS APPROVAL DATE

THE STATE OF CALIFORNIA OR ITS OFFICERS OR AGENTS SHALL NOT BE RESPONSIBLE FOR THE ACCURACY OR COMPLETENESS OF SCANNED COPIES OF THIS PLAN SHEET.

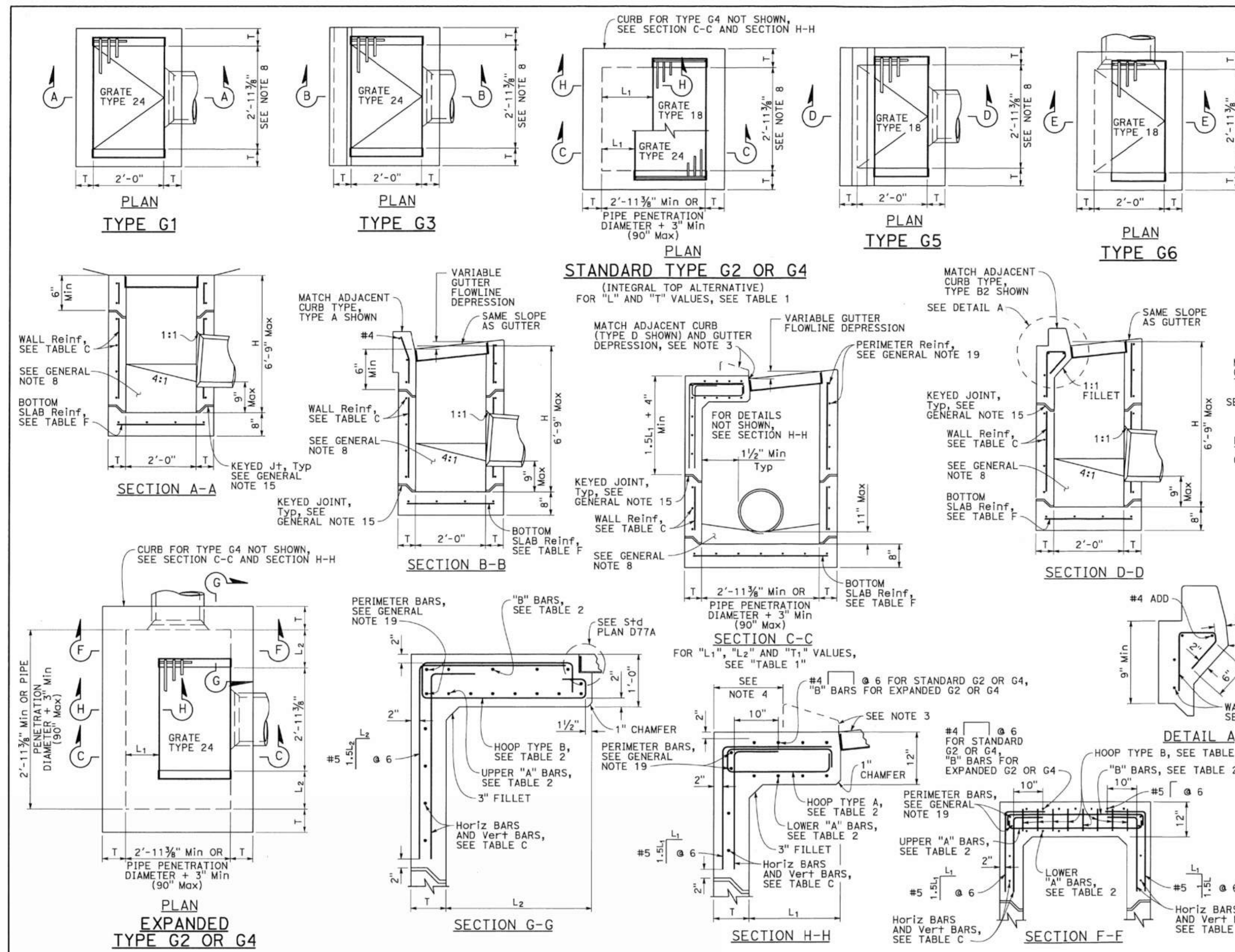

NOTES:

1. For notes and Table 2, See Standard Plan D73C.
2. For L_1 or L_2 greater than 2'-10", see Table 1 for wall thickness dimension and see Table C in Standard Plan D73G for reinforcement. Otherwise, see Table C in Standard Plan D73G for wall thickness and reinforcement.

TABLE 1	
	T
L_1 OR L_2 > 2'-10"	12"

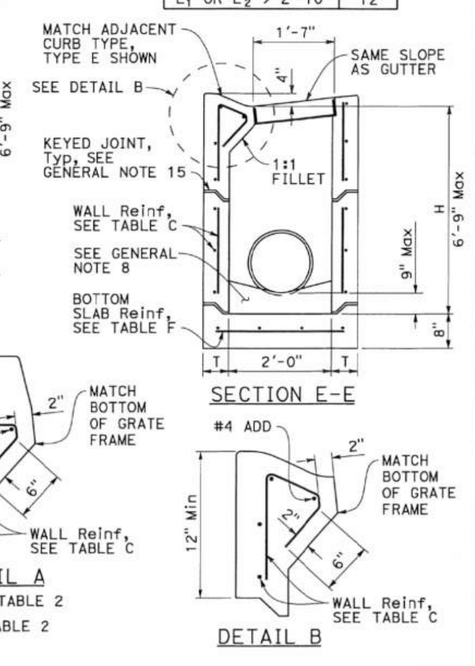

2022 STANDARD PLAN D73B

STATE OF CALIFORNIA
DEPARTMENT OF TRANSPORTATION

PRECAST DRAINAGE INLETS TYPES G1, G2, G3, G4, G5 AND G6

NO SCALE

D73B

6-24-22

TYPE G2 EXPANDED DRAINAGE INLET

NTS

206

Dist	COUNTY	ROUTE	POST MILES TOTAL PROJECT	SHEET No.	TOTAL SHEETS

REGISTERED CIVIL ENGINEER – Carl M. Duan, No. C59976, Exp. 6-30-24, CIVIL, STATE OF CALIFORNIA

August 1, 2022
PLANS APPROVAL DATE

THE STATE OF CALIFORNIA OR ITS OFFICERS OR AGENTS SHALL NOT BE RESPONSIBLE FOR THE ACCURACY OR COMPLETENESS OF SCANNED COPIES OF THIS PLAN SHEET.

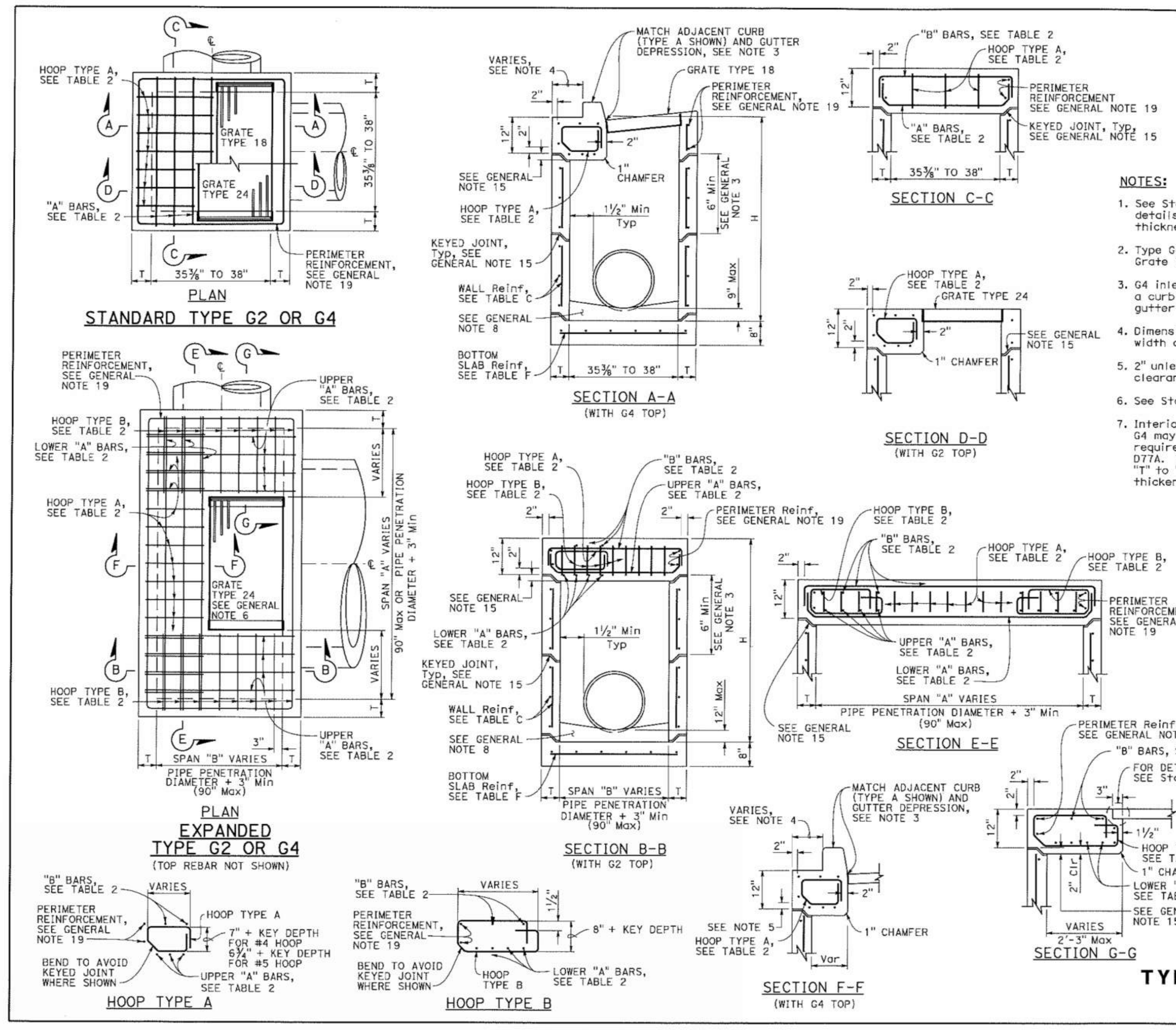

NOTES:

1. See Standard Plan D73F for General Notes and additional details. See Standard Plan D73G for additional tables, wall thickness "T" and quantities.
2. Type G4 inlet can use Grate Type 18 or 24. Type G2 inlet uses Grate Type 24.
3. G4 inlet details are the same as the G2 with the addition of a curb and sloped grate that matches the adjacent curb and gutter depression.
4. Dimension will vary with different grates, curb types, box width and wall thickness.
5. 2" unless inlet is expanded in the Span "A" direction, then clearance is 2" plus the diameter of the lower "A" bar.
6. See Standard Plan D73B for integral top slab alternative.
7. Interior dimension of lower sections of inlet for Types G2 and G4 may be 3'-0" provided top section conforms to the requirements for frame and grate types on Standard Plan D77A. The wall thickness of top sections may transition from "T" to "T"+5⁄6" to meet this requirement. Minimum height of thickened wall shall = "T".

TABLE 2 - TOP SLAB REINFORCEMENT

16 BAR DIAMETERS – "A" & "B" BARS – VARIES – BEND TO AVOID KEYED JOINT WHERE SHOWN

	W/ CURB	W/O CURB
"A" BARS	#4 @ 5 (2 BARS Min)	#5 @ 5 (3 BARS Min)
"B" BARS	#4 @ 10 (2 BARS Min)	#4 @ 10 (2 BARS Min)
HOOPS ("A" & "B")	#4 @ 5	#5 @ 5

ROTATE "A" AND "B" BARS SO HOOKED ENDS WILL MAINTAIN 2" CLEAR COVERAGE.

2022 STANDARD PLAN D73C

STATE OF CALIFORNIA
DEPARTMENT OF TRANSPORTATION

PRECAST DRAINAGE INLETS TYPES G1, G2 G3, G4, G5 AND G6

NO SCALE

D73C

TYPE G2 EXPANDED DRAINAGE INLET

NTS

209

Dist	COUNTY	ROUTE	POST MILES TOTAL PROJECT	SHEET No.	TOTAL SHEETS

REGISTERED CIVIL ENGINEER – Carl M. Duan, No. C59976, Exp. 6-30-24, CIVIL, STATE OF CALIFORNIA

August 1, 2022
PLANS APPROVAL DATE

THE STATE OF CALIFORNIA OR ITS OFFICERS OR AGENTS SHALL NOT BE RESPONSIBLE FOR THE ACCURACY OR COMPLETENESS OF SCANNED COPIES OF THIS PLAN SHEET.

GENERAL NOTES:

1. "H" is measured from top of bottom slab to the normal gutter grade line undepressed at the curb face.
2. For "T" wall thickness and reinforcement, see Table C on Standard Plan D73G.
3. Wall reinforcement must be placed at the center of wall thickness with horizontal bars placed on the exterior face. Bottom slab concrete cover must be 3" clear on the interior side face unless otherwise noted. Top slab concrete cover must be 2" clear on the exterior face unless otherwise noted. Short independent wall sections or height adjustment rings 6" to 24" high must have a minimum of two #4 horizontal bars. Reinforcement spacing is in inches unless otherwise noted.
4. Steps - None required where "H" is less than 2'-6". Where "H" is 2'-6" or more, install steps with lowest rung 1'-0" above the floor and highest rung not more than 6" below bottom of lid. The distance between steps must not exceed 1'-0" and be uniform throughout the length of the wall. Place steps in the wall without an opening. Steps inserts may be substituted for the bar steps. Step inserts must comply with State Industrial Safety Requirements. See Standard Plan D74 for step details.
5. Pipe(s) can be placed in any wall. Adjacent to each side of the opening, place additional reinforcement equivalent to half the interupted main reinforcement. For larger pipes greater than or equal to 42" diameter, also add 4 diagonal bars, 1 bar each side. Bars must be the same size as the larger of the main vertical or horizontal bars. Extend bars one development length past the intersection with the adjacent diagonal bar, or where bars intersect mid thickness of adjacent wall bottom or top of non-continuous wall, bend ends as required into same plane.
6. Set inlet so that grate bars are parallel to direction of principal surface flow.
7. Curb section must match adjacent curb.
8. Except for inlets used as junction boxes, basin floors must have wood trowel finish and a minimum slope of 4:1, unless otherwise noted, from all directions toward outlet pipe by casting grout on top of the bottom slab. Grout must be placed prior to backfill.
9. See Standard Plans D77A and D77B for grate and frame details and weights of miscellaneous iron and steel.
10. See Standard Plans D78A and D78B for gutter depression details.
11. See Standard Plans A87A and A87B for curb and dike details.
12. Details shown apply to metal, concrete and plastic pipe(s).
13. The Contractor may use WWR instead of bar reinforcement. The ratio of bar reinforcement to WWR shall be based on the yield strength ratio.
14. Seal precast inlets connection openings between wall and pipe with non-shrink grout or resilient connectors as specified in the Special Provisions. Precast inlets shall have mortared connections conforming to details for Type GCP Inlet shown on Standard Plan D75B. See Standard Specifications for mortar composition.
15. Where shown, provide precast inlets with separate top sections for final grade adjustment. Provide keyed joints with butyl rubber sealant between the top section and wall, multiple wall sections, and wall and bottom slab. Joint design may vary but must be 1" to 3" in depth. For tongue type joints, tongue down orientation is not allowed. For keyed joints, keyway up, keyway down or tongue up configurations are allowed. Only one key type is allowed for each drainage inlet.
16. Non-shrink grout can be used for upper most joint to facilitate final top grade adjustment.
17. Provide a level and firm sand bedding on which to place precast inlets. Extend sand bedding under all structure backfill.
18. For Integral Base, see Detail "A".
19. Perimeter reinforcement must not be smaller than main bars and #4 and serves as a rigid frame to position and attach the required structural reinforcement and may be tack welded at outer corners when using ASTM A706 weldable bars.
20. Inlet extensions may be cast in place after placement of main box and placement and compaction of backfill. Concrete strength must be 3.6 ksi minimum. All slab and wall thicknesses must be per Standard Plan D72A. All reinforcement shall extend a minimum of 24" from precast main inlet box.

DESIGN NOTES:

1. Design Specifications: AASHTO LRFD Bridge Design Specifications, 6th edition with 2012 Interims and Errata and CA Amendments.
2. Live Load (AASHTO LRFD 3.6.1.2):
   HL-93, consists of design truck or tandem, and design lane load.
   Dynamic Load Allowance, IM = 33%
   Multiple Presence Factor, m = 1.0
   Design lane load was excluded in Top Slab design. A wheel load of 8 kips without impact factor was used for top slabs that are above a curb.
3. Earth Load:
   Vertical pressure = 140 pcf
   Lateral pressure:
   = 100 pcf for walls with flat embankment
   = 140 pcf For walls with slope embankment, 1.5:1 Max
4. Downdrag: ϕ = 34° and γ_E = 120 pcf.
5. Buoyancy: γ_w = 62.4 pcf to finished grade.
6. Reinforced Concrete: f'c = 5.0 ksi, fy = 60.0 ksi.
7. Tables are based on the worst case from the level ground and sloped ground.
8. Soil pressures shown are factored per AASHTO LRFD and include self-weight, live load and downdrag.

SPAN "A" OR "B" (IN)	L (IN)
<38	34
38 TO 50	40
51 TO 64	47
65 TO 76	53
77 TO 90	60

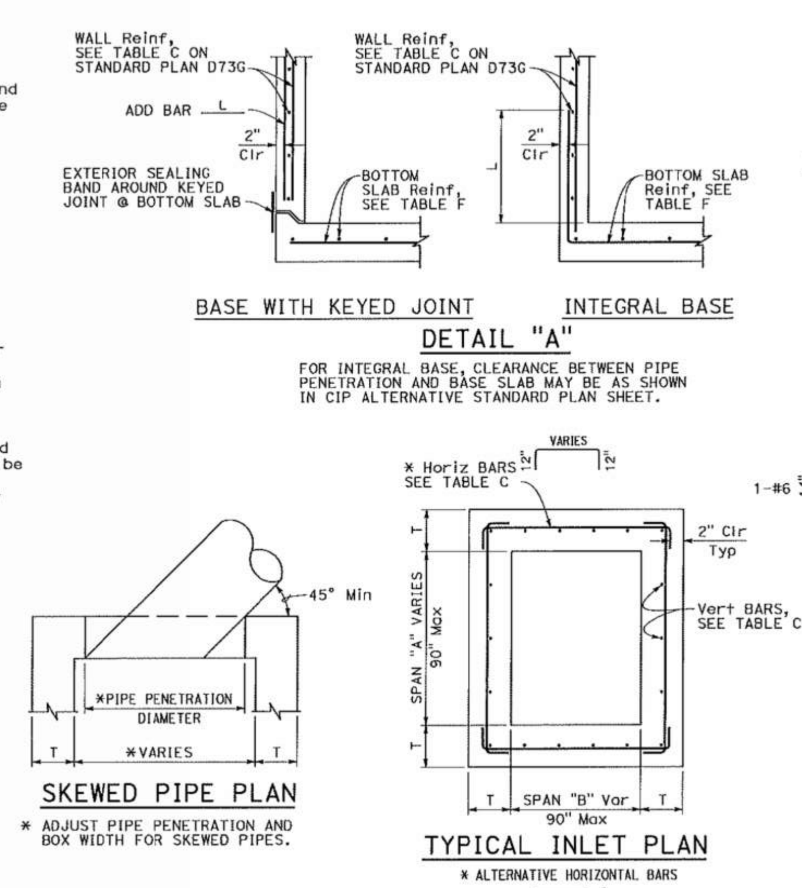

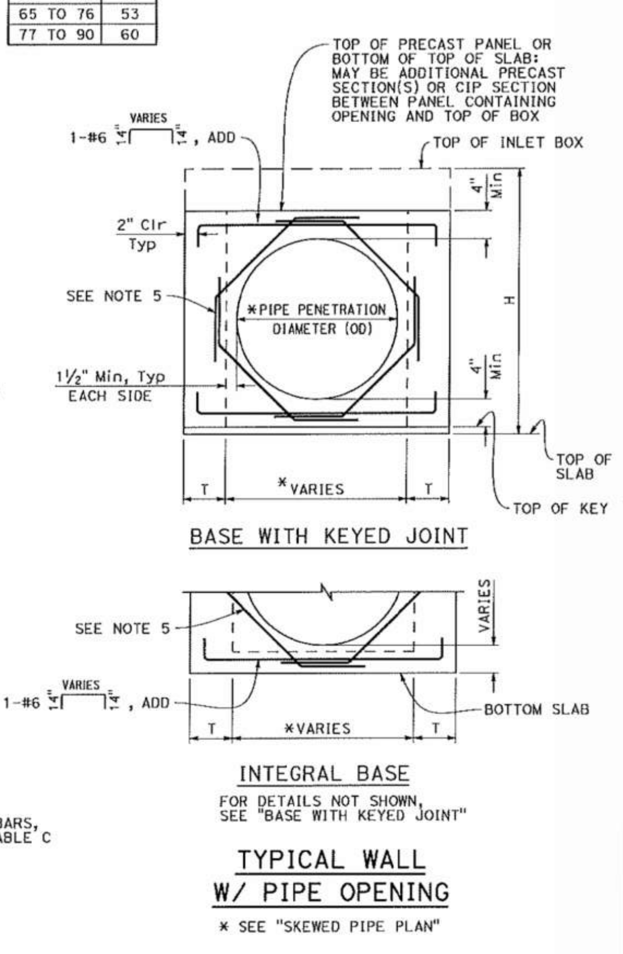

2022 STANDARD PLAN D73F

STATE OF CALIFORNIA
DEPARTMENT OF TRANSPORTATION

PRECAST DRAINAGE INLET NOTES

NO SCALE

D73F

6-24-22

PRECAST DRAINAGE INLETS NOTES

NTS

210

Dist	COUNTY	ROUTE	POST MILES TOTAL PROJECT	SHEET No.	TOTAL SHEETS

REGISTERED CIVIL ENGINEER – Carl M. Duan, No. C59976, Exp. 6-30-24, CIVIL, STATE OF CALIFORNIA

August 1, 2022
PLANS APPROVAL DATE

THE STATE OF CALIFORNIA OR ITS OFFICERS OR AGENTS SHALL NOT BE RESPONSIBLE FOR THE ACCURACY OR COMPLETENESS OF SCANNED COPIES OF THIS PLAN SHEET.

TABLE A - CONCRETE QUANTITIES

TYPE	H=3'-0" TO 8'-0"		H=8'-1" TO 20'-0"	
	H=3'-0" (CY)	ADDITIONAL CONCRETE PER FOOT (CY)	H=8'-1" (CY)	ADDITIONAL CONCRETE PER FOOT (CY)
G1	0.95	0.220	SEE NOTE 2	SEE NOTE 2
G2*	1.25	0.255	2.55	0.255
G3	1.06	0.220	SEE NOTE 2	SEE NOTE 2
G4 (TYPE 18)*	1.41	0.255	2.71	0.255
G4 (TYPE 24)*	1.36	0.255	2.65	0.255
G5	1.09	0.220	SEE NOTE 2	SEE NOTE 2
G6	1.14	0.220	SEE NOTE 2	SEE NOTE 2
OS	1.28	0.278	2.69	0.278
OL7	1.92	0.278	3.33	0.278
OL10	2.43	0.278	3.84	0.278
OL14	3.16	0.278	4.57	0.278
OL21	4.58	0.278	5.99	0.278
GOL7	2.36	0.313	4.04	0.434
GOL10	2.84	0.313	4.53	0.434
GT1	2.30	0.480	SEE NOTE 2	SEE NOTE 2
GT2	2.71	0.530	5.40	0.530
GT3	2.29	0.480	SEE NOTE 2	SEE NOTE 2
GT4	2.69	0.530	5.39	0.530
GO	1.25	0.245	2.37	0.245
GDO	1.64	0.322	3.37	0.446

* Quantities are based on the minimum interior dimensions.

TABLE B - REINFORCEMENT QUANTITIES

TYPE	H=3'-0" TO 8'-0"		H=8'-1" TO 20'-0"	
	H=3'-0" (LB)	ADDITIONAL REINFORCEMENT PER FOOT (LB)	H=8'-1" (LB)	ADDITIONAL REINFORCEMENT PER FOOT (LB)
G1	88.5	21.90	SEE NOTE 2	SEE NOTE 2
G2*	151.5	24.54	277.4	38.64
G3	92.9	21.90	SEE NOTE 2	SEE NOTE 2
G4 (TYPE 18)*	134.4	24.54	260.3	38.64
G4 (TYPE 24)*	125.1	24.54	251.0	38.64
G5	92.5	21.90	SEE NOTE 2	SEE NOTE 2
G6	92.5	21.90	SEE NOTE 2	SEE NOTE 2
OS	145.8	35.57	327.8	49.60
OL7	328.0	35.57	510.0	49.60
OL10	467.5	35.57	649.5	49.60
OL14	667.5	35.57	849.5	49.60
OL21	1056.1	35.57	1238.1	49.60
GOL7	474.7	45.17	706.8	74.02
GOL10	604.9	45.17	836.9	74.02
GT1	349.0	80.48	SEE NOTE 2	SEE NOTE 2
GT2	403.7	86.82	849.1	135.15
GT3	347.0	80.48	SEE NOTE 2	SEE NOTE 2
GT4	403.7	86.82	849.1	135.15
GO	99.8	23.75	221.7	37.46
GDO	208.8	46.22	446.2	75.61

* Quantities are based on the minimum interior dimensions.

TABLE D

INLET	CURB USED IN QUANTITIES
G1	-
G2	-
G3	A1-6
G4 (Type 18)	A1-6
G4 (Type 24)	A1-6
G5	B1-4
G6	½E
OS	-
OL7	-
OL10	-
OL14	-
OL21	-
GOL7	-
GOL10	-
GT1	D-6
GT2	E
GT3	A2-8
GT4	A2-8
GO	-
GDO	-

TABLE C - WALL REINFORCEMENT

TYPE	H ≤8'-0" (T=6", UON)			8'-0"< H ≤20'-0" (T=8", UON)		
	HORIZONTAL	VERTICAL	*ADD	HORIZONTAL	VERTICAL	*ADD
OS	#4@6	#3@8	#3@8	#4@4 (T=6")	#3@8	#3@8
OL	#4@6	#3@8	#3@8	#4@4 (T=6")	#3@8	#3@8
GOL	#4@5	#3@8	#3@8	#5@5	#3@6	#3@6
G1 (H ≤6'-9")	#4@9	#3@8	#3@8	-	-	-
G2 & G4 (a** ≤38")	#4@9	#3@8	#3@8	#4@5 (T=6")	#3@8	#3@8
G2 & G4 (38" < a** ≤50")	#4@6	#3@8	#3@8	#4@4 (T=6")	#3@8	#3@8
G2 & G4 (50" < a** ≤64")	#4@5	#3@8	#3@8	#5@5	#3@6	#3@6
G2 & G4 (64"< a** ≤76")	#5@7 (T=8")	#3@6	#3@6	#5@4	#3@6	#5@6
G2 & G4 (76" < a** ≤90")	#5@5 (T=8")	#3@6	#3@6	#5@3	#3@6	#5@6
G3 (H ≤6'-9")	#4@9	#3@8	#3@8	-	-	-
G5 (H ≤6'-9")	#4@9	#3@8	#3@8	-	-	-
G6 (H ≤6'-9")	#4@9	#3@8	#3@8	-	-	-
GT1 (H ≤6'-9")	#5@5 (T=8")	#3@6	#3@6	-	-	-
GT2	#5@5 (T=8")	#3@6	#3@6	#5@3	#3@6	#5@6
GT3 (H ≤6'-9")	#5@5 (T=8")	#3@6	#3@6	-	-	-
GT4	#5@5 (T=8")	#3@6	#3@6	#5@3	#3@6	#5@6
GO	#4@9	#3@8	#3@8	#4@5 (T=6")	#3@8	#3@8
GDO	#4@5	#3@8	#3@8	#5@5	#3@6	#3@6

* See Detail A on Standard Plan D73F for additional vertical bars at the base.
** a = Larger interior span

TABLE E

SOIL PRESSURE BELOW BASE SLAB (ksf)		
TYPE	H ≤8'-0"	8'-0"< H ≤20'-0"
OS	2.89	5.68
OL*	2.89	5.68
GOL*	2.36	4.93
G1 (H ≤6'-9")	3.51	-
G2 & G4 (a** ≤38")	2.96	5.79
G2 & G4 (38" < a** ≤50")	2.21	4.51
G2 & G4 (50" < a** ≤64")	3.19	4.89
G2 & G4 (64"< a** ≤76")	2.50	4.23
G2 & G4 (76" < a** ≤90")	2.04	3.56
G3 (H ≤6'-9")	3.51	-
G5 (H ≤6'-9")	3.51	-
G6 (H ≤6'-9")	3.51	-
GT1 (H ≤6'-9")	3.41	-
GT2	3.60	6.42
GT3 (H ≤6'-9")	3.41	-
GT4	3.60	6.42
GO	3.37	6.46
GDO	2.48	7.30

* Main Box
** a = Larger interior span

TABLE F

BASE SLAB REINFORCEMENT (T=8", UON)		
TYPE	H ≤8'-0"	8'-0"< H ≤20'-0"
OS	#4@8 (EW)	#4@5 (EW)
OL*	#4@8 (EW)	#4@5 (EW)
GOL*	#4@6 (EW)	#4@4 (EW)
G1 (H ≤6'-9")	#4@10 (EW)	-
G2 & G4 (a** ≤38")	#4@10 (EW)	#4@6 (EW)
G2 & G4 (38" < a** ≤50")	#4@8 (EW)	#4@5 (EW)
G2 & G4 (50" < a** ≤64")	#4@6 (EW)	#4@4 (EW)
G2 & G4 (64"< a** ≤76")	#4@5 (EW)	#4@3 (EW)
G2 & G4 (76" < a** ≤90")	#4@4 (EW)	#5@3 (EW)
G3 (H ≤6'-9")	#4@10 (EW)	-
G5 (H ≤6'-9")	#4@10 (EW)	-
G6 (H ≤6'-9")	#4@10 (EW)	-
GT1 (H ≤6'-9")	#4@4 (EW)	-
GT2	#4@4 (EW)	#5@3 (EW)
GT3 (H ≤6'-9")	#4@4 (EW)	-
GT4	#4@4 (EW)	#5@3 (EW)
GO	#4@10 (EW)	#4@6 (EW)
GDO	#4@6 (EW)	#4@4 (EW)

(EW) Each Way
* Main Box
** a = Larger interior span

NOTES:

1. No deduction or adjustment was made to the quantities of concrete and reinforcement for pipe openings, floor alternatives or curb type.
2. Maximum allowable height is 6'-9".
3. Quantities are approximate and for design purposes only.
4. Design is based on envelope of level and sloped ground.

2022 STANDARD PLAN D73G

STATE OF CALIFORNIA
DEPARTMENT OF TRANSPORT/

PRECAST DRAINAG TABLES

REGISTERED PROFESSIONAL ENGINEER – RYAN YOUNG – No. 67604 – CIVIL – STATE OF CALIFORNIA
5/7/25

PRECAST DRAINAGE INLETS TABLES

NTS

GREEN WORKS
LANDSCAPE ARCHITECTURE
ENVIRONMENTAL DESIGN
110 SE Main St., Suite 100
Portland, OR 97214
Ph: 503 222 5612
Fax: 503 222 2283
Email: info@greenworkspc.com

STOVER ENGINEERING
Civil Engineers and Consultants
PO BOX 783 - 711 H STREET
CRESCENT CITY, CA 95531 707-465-6742

VERIFY SCALE: DRAWINGS ARE TO SCALE IF BAR MEASURES 1"
0" 1/2" 1"

CITY OF CRESCENT CITY 1854 CALIFORNIA

Project: Beachfront Park Clean CA
City of Crescent City
377 J STREET
CRESCENT CITY, CA, 95531
707-464-9506
ewier@crescentcity.org

Submittal: Bid Set

Sheet Title: **Caltrans Details**

© GREENWORKS, P.C. 2024, ALL RIGHTS RESERVED

THESE DRAWINGS ARE THE PROPERTY OF GREENWORKS, P.C., AND ARE NOT TO BE USED OR REPRODUCED IN ANY MANNER, EXCEPT WITH THE PRIOR WRITTEN PERMISSION OF GREENWORKS, P.C.

Date: 05/09/2025
Revisions:

Drawn By: GLH
Checked By: RCY
Job No. 220065
Approved:

C2.20
Sheet No. of