CRESCENT CITY

CULTURAL GATEWAYS AND BEAUTIFICATION PROJECT

CRESCENT CITY, CALIFORNIA

SUBMITTAL

BID SET
ISSUE DATE: 05/09/2025

PROJECT DESCRIPTION

BEACHFRONT PARK IS LOCATED SOUTH OF DOWNTOWN CRESCENT CITY, CALIFORNIA, AND NORTH OF CRESCENT HARBOR, IN PROXIMITY TO THE REDWOODS NATIONAL AND STATE PARKS. SITE FEATURES INCLUDE THE DISCOVERY CENTER PLAZA, TOLOWA WALK, AND INTERPRETIVE NODES.

NOTE: SEE CIVIL FOR FRONT STREET RIGHT OF WAY IMPROVEMENT PACKAGE.

VICINITY MAP

NORTH
NOT TO SCALE

PROJECT DIRECTORY

OWNER/CONTACT

CITY OF CRESCENT CITY
377 J STREET
CRESCENT, CA 95531
PHONE: 707-464-9506
PROJECT CONTACT: ERIC WIER, ASHLEY TAYLOR
EMAIL: ewier@crescentcity.org
ataylor@crescentcity.org

LANDSCAPE ARCHITECT

GREENWORKS, P.C.
110 SE MAIN ST, SUITE 100
PORTLAND, OR 97214
www.greenworkspc.com
PROJECT CONTACT: BEN JOHNSON
PHONE: 503-222-5612
EMAIL: benj@greenworkspc.com

SURVEY

STOVER ENGINEERING AND CONSULTING
711 H ST
CRESCENT CITY, CA 95531
PHONE: 707-465-6742
PROJECT CONTACT: WARD STOVER
EMAIL: wstover@stovereng.com

CIVIL

STOVER ENGINEERING AND CONSULTING
711 H STREET
CRESCENT CITY, CA 95531
PHONE: 707-465-6742
PROJECT CONTACT: WARD STOVER
EMAIL: wstover@stovereng.com

ENVIRONMENTAL AND REGULATORY SERVICES

CAMAS, LLC.
680 G ST
SUITE C
JACKSONVILLE, OR 97530
PHONE: 541-231-9392
PROJECT CONTACT: MATT ROBART
EMAIL: matt@camasllc.com

STRUCTURAL

KPFF
111 SW 5TH AVE, STE 2600
PORTLAND, OR 97204
PHONE: 503-764-0544
PROJECT CONTACT: STUART FINNEY, PE
EMAIL: stuart.finney@kpff.com

ARCHITECTURE

SCOTT EDWARDS ARCHITECTURE
2525 E BURNSIDE ST,
PORTLAND, OR 97214
PHONE: 503-226-3617
PROJECT CONTACT: KAREN VAN RADEN
EMAIL: KVANRADEN@SEALP.COM

INTERPRETIVE

SEA REACH
146 NE YAMHILL ST
SHERIDAN, OREGON 97378
PHONE: 503-843-2005
PROJECT CONTACT: SUSAN JURASZ
EMAIL: susan@seareach.com

GREEN WORKS
LANDSCAPE ARCHITECTURE
ENVIRONMENTAL DESIGN
110 SE Main St., Suite 100
Portland, OR 97214
Ph: 503 222 5612
Fax: 503 222 2283
Email: info@greenworkspc.com

LICENSED LANDSCAPE ARCHITECT
BENJAMIN JOHNSON #493
Signature
Renewal Date
Date
STATE OF CALIFORNIA

VERIFY SCALE: DRAWINGS ARE TO SCALE IF BAR MEASURES 1"
0" 1/2" 1"

CITY OF CRESCENT CITY CALIFORNIA 1854

Project: Beachfront Park Clean CA
City of Crescent City
377 J STREET
CRESCENT CITY, CA, 95531
707-464-9506
ewier@crescentcity.org

Submittal: BID SET

Sheet Title: Cover Sheet

© GREENWORKS, P.C. 2024, ALL RIGHTS RESERVED

THESE DRAWINGS ARE THE PROPERTY OF GREENWORKS, P.C., AND ARE NOT TO BE USED OR REPRODUCED IN ANY MANNER, EXCEPT WITH THE PRIOR WRITTEN PERMISSION OF GREENWORKS, P.C.

Date:	05/09/2025
Revisions:	
Drawn By:	SS/MM/PG
Checked By:	BJ/GM
Job No.	220065
Approved:	BJ

G0.00

Sheet No. 1 of 63

G:\PROJECTS\220065-1_CRESCENT_CITY_BEACHFRONT_PARK\02_CLEAN_CA\02_PRODUCTION\01_CAD\01_PLOT_SHEETS\220065_COVR_CCA.DWG

SHEET INDEX

SHEET #	SHEET TITLE
GENERAL	
G.00	COVER SHEET
G.01	SHEET INDEX
G.02	GENERAL LEGENDS AND NOTES
G.03	OVERALL PLAN
EXISTING CONDITIONS	
L1.00	EXISTING CONDITIONS NOTES AND LEGEND
L1.01	EXISTING CONDITIONS PLAN
L1.02	EXISTING CONDITIONS PLAN
L1.03	EXISTING CONDITIONS PLAN
L1.04	EXISTING CONDITIONS PLAN
TREE PROTECTION & REMOVAL	
L2.00	TREE PROTECTION NOTES AND DETAIL
L2.01	TREE PROTECTION AND REMOVAL PLAN
L2.02	TREE PROTECTION AND REMOVAL PLAN
L2.03	TREE PROTECTION AND REMOVAL PLAN
L2.04	TREE PROTECTION AND REMOVAL PLAN
DEMOLITION	
L3.01	DEMOLITION PLAN
L3.02	DEMOLITION PLAN
L3.03	DEMOLITION PLAN
L3.04	DEMOLITION PLAN
MATERIALS	
L4.00	MATERIALS NOTES AND LEGEND
L4.01	MATERIALS PLAN
L4.02	MATERIALS PLAN
L4.03	MATERIALS PLAN
L4.04	MATERIALS PLAN
L4.05	MATERIALS PLAN ENLARGEMENTS
LAYOUT	
L5.00	LAYOUT SCHEDULE
L5.01	LAYOUT SCHEDULE
L5.02	LAYOUT PLAN
L5.03	LAYOUT PLAN
L5.04	LAYOUT PLAN
L5.05	LAYOUT PLAN
L5.06	LAYOUT PLAN ENLARGEMENTS
GRADING	
L6.01	GRADING PLAN
L6.02	GRADING PLAN
L6.03	GRADING PLAN
L6.04	GRADING PLAN
IRRIGATION	
L7.00	IRRIGATION NOTES AND LEGEND
L7.01	IRRIGATION PLAN
L7.02	IRRIGATION PLAN
L7.03	IRRIGATION PLAN
L7.04`	IRRIGATION PLAN
PLANTING	
L8.00	PLANTING NOTES AND LEGEND
L8.01	PLANTING PLAN
L8.02	PLANTING PLAN
L8.03	PLANTING PLAN
L8.04	PLANTING PLAN
L8.05	PLANTING PLAN ENLARGEMENTS

SHEET #	SHEET TITLE
DETAILS	
L9.01	SITE DETAILS
L9.02	SITE DETAILS
L9.03	SITE DETAILS
L9.04	SITE DETAILS
L9.05	SITE DETAILS
L9.06	IRRIGATION DETAILS
L9.07	IRRIGATION DETAILS
L9.08	PLANTING DETAILS
INTERPRETIVE	
F1	BURDEN BASKET INTERPRETIVE NODE
F2	BURDEN BASKET INTERPRETIVE NODE
F3	BURDEN BASKET INTERPRETIVE NODE
F4	REDWOOD TREE INTERPRETIVE NODE
F5	REDWOOD TREE INTERPRETIVE NODE
F6	TOLOWA WALK ENTRY EXHIBITS
F7	TOLOWA WALK ENTRY EXHIBITS
F8	TRIP PLANNING SIGNS
CIVIL	
C1.00	UTILITY PLAN
C2.00	STORM DRAIN DETAILS
C2.10	STORM DRAIN DETAILS
C2.20	CALTRANS DETAILS
ARCHITECTURE	
G1.01	DISCOVERY CENTER GENERAL INFORMATION, LIFE SAFETY PLANS
A2.11	DISCOVERY CENTER - ENTRANCE
A2.12	DISCOVERY CENTER CONFERENCE ROOM
STRUCTURAL	
S0.01	DRAWING INDEX AND LIST OF ABBREVIATIONS
S0.02	GENERAL STRUCTURAL NOTES
S0.03	SPECIAL INSPECTIONS
S2.10	PARTIAL FIRST AND SECOND FLOOR FRAMING PLANS
S7.01	DETAILS

NOTE: SEE CIVIL FOR FRONT STREET RIGHT OF WAY IMPROVEMENT PACKAGE.

GREEN WORKS

LANDSCAPE ARCHITECTURE
ENVIRONMENTAL DESIGN

110 SE Main St., Suite 100
Portland, OR 97214
Ph: 503 222 5612
Fax: 503 222 2283
Email: info@greenworkspc.com

LICENSED LANDSCAPE ARCHITECT
BENJAMIN JOHNSON #493
Signature
Renewal Date
Date
STATE OF CALIFORNIA

VERIFY SCALE: DRAWINGS ARE TO SCALE IF BAR MEASURES 1"
0" 1/2" 1"

CITY OF CRESCENT CITY
1854
CALIFORNIA

Project:
Beachfront Park
Clean CA
City of Crescent City
377 J STREET
CRESCENT CITY, CA, 95531
707-464-9506
ewier@crescentcity.org

Submittal: BID SET

Sheet Title:
Sheet Index

© GREENWORKS, P.C.
2024, ALL RIGHTS RESERVED

THESE DRAWINGS ARE THE PROPERTY OF GREENWORKS, P.C., AND ARE NOT TO BE USED OR REPRODUCED IN ANY MANNER, EXCEPT WITH THE PRIOR WRITTEN PERMISSION OF GREENWORKS, P.C.

Date:	05/09/2025
Revisions:	
Drawn By:	SS/MM/PG
Checked By:	BJ/GM
Job No.	220065
Approved:	BJ

G0.01

Sheet No. 2 of 63

G:\PROJECTS\220065.1_CRESCENT_CITY_BEACHFRONT_PARK\02_CLEAN_CA\02_PRODUCTION\01_CAD\01_PLOT_SHEETS\220065_COVR_CCA.DWG

GENERAL NOTES

1. SURVEY INFORMATION:
   HORIZONTAL DATUM: NAD83 (2011), EPOCH 2010, GRS 80, INT'L FEET.
   VERTICAL DATUM: NORTH AMERICAN VERTICAL DATUM OF 1988 (NAVD 88), US FEET.
   PROJECTION: THE CALIFORNIA STATE PLANE COORDINATE SYSTEM (ZONE 1).

2. ALL WORK PERFORMED IN CONNECTION WITH THE CONTRACT DOCUMENTS, INCLUDING MATERIALS FURNISHED, WORKMANSHIP, AND MEANS AND METHODS OF CONSTRUCTION SHALL CONFORM TO THE LATEST STANDARDS, PRACTICES AND REQUIREMENTS OF THE APPLICABLE FEDERAL, STATE AND LOCAL AUTHORITIES.

3. IT SHALL BE THE RESPONSIBILITY OF THE CONTRACTOR TO VERIFY ALL UTILITY LOCATIONS, DEPTHS AND ELEVATIONS PRIOR TO CONSTRUCTION AND ARRANGE FOR THE RELOCATION OF ANY IN CONFLICT WITH ALL CONSTRUCTION ACTIVITIES. THE LOCATIONS AND IDENTIFICATION OF UTILITIES WITHIN THIS DOCUMENT IS FOR INFORMATION ONLY AND IS NOT GUARANTEED TO BE ACCURATE. ANY DISCREPANCIES BETWEEN SURVEY INFORMATION AND FIELD CONDITIONS SHALL BE BROUGHT TO THE ATTENTION OF THE OWNER'S REPRESENTATIVE IMMEDIATELY.

4. IT SHALL BE UNDERSTOOD THAT THE IMPROVEMENTS SHOWN ON THE DRAWINGS AND SPECIFICATIONS ARE MEANT TO COMPLY WITH ALL APPLICABLE CODES AND ORDINANCES. MODIFICATIONS, CONFLICTS, OR ISSUES THAT ARISE THAT WOULD CONTRADICT RELEVANT CODES AND ORDINANCES SHALL BE BROUGHT TO THE ATTENTION OF THE OWNER'S REPRESENTATIVE IMMEDIATELY.

5. COMPLY WITH CALIFORNIA LAW REQUIRING ADHERENCE TO THE RULES ADOPTED BY THE CALIFORNIA UTILITY NOTIFICATION CENTER. NOTIFY THE CALIFORNIA UTILITY NOTIFICATION CENTER AT LEAST 2 BUSINESS DAYS, BUT NOT MORE THAN 14 BUSINESS DAYS, BEFORE COMMENCING AN EXCAVATION. THOSE RULES ARE SET FORTH IN CGC SECTION 4216. PHONE CONTACT FOR THE CALIFORNIA UTILITY NOTIFICATION CENTER IS 1-800-642-2444 (or 811).

6. PRESERVE AND PROTECT EXISTING UTILITIES UNLESS OTHERWISE NOTED.

7. REPAIR AT OWN EXPENSE ANY DAMAGE DONE TO UTILITY SYSTEMS, SURFACE PAVEMENTS, SITE FEATURES, AND STRUCTURES, WHETHER INSIDE OR OUTSIDE OF THE PROJECT LIMITS, THAT ARE NOT DIRECTLY INDICATED TO BE REMOVED OR RELOCATED AS PART OF THE PROJECT CONSTRUCTION.

8. ALL QUANTITIES SHOWN ON THE DRAWINGS OR SPECIFICATIONS ARE FOR CONVENIENCE ONLY.

9. UPON PROJECT COMPLETION, THE PROJECT AREA AND ADJACENT SPACES SHALL BE FREE AND CLEAR OF ALL CONSTRUCTION MATERIALS, WASTE AND DEBRIS. CONTRACTOR SHALL REMOVE AND PROPERLY DISPOSE OF ALL MATERIALS AS INDICATED IN THE PROJECT CONTRACT DOCUMENTS AND MUST MEET ALL APPLICABLE REGULATIONS OVERSEEING WASTE DISPOSAL.

GENERAL LEGEND

SYMBOL	EXISTING ITEM
205	MAJOR CONTOUR
205	MINOR CONTOUR
	CONCRETE PAVING
	CHAIN-LINK FENCE
	WOODEN FENCE
	WOOD POST METAL GUARDRAIL
	DRAIN
	CONCRETE POSTS WITH CHAIN
sd sd	STORM DRAIN LINE
ss ss	SANITARY SEWER LINE
w w	WATER LINE
ELEC	ELECTRICAL SERVICE BOX
CO	SEWER CLEANOUT
HB	HOSE BIB
WV	WATER VALVE
	HYDRANT
S	MANHOLE
	WHEEL STOP
	PICNIC TABLE
	TRASH AND RECYCLING RECEPTACLE

SYMBOL	EXISTING ITEM
	LIGHT POLE
	SIGN
	DISC GOLF TEE
	PROPOSED
205	MAJOR CONTOUR
205	MINOR CONTOUR

TABLE OF ABBREVIATIONS

NOTE: NOT ALL ABBREVIATIONS REFERENCED IN DRAWINGS. ABBREVIATIONS MAY BE SHOWN WITH OR WITHOUT PERIODS.

@	AT	MAX	MAXIMUM
ALUM	ALUMINUM	MIN	MINIMUM
APPROX	APPROXIMATE	MH	MANHOLE
ARCH	ARCHITECT	NIC	NOT IN CONTRACT
AC	ASPHALT CONCRETE	NOM	NOMINAL
BC	BOTTOM OF CURB	NPS	NOMINAL PIPE SIZE
B&B	BALLED AND BURLAP	NTS	NOT TO SCALE
BLDG	BUILDING	OH	OVER HEAD
BM	BENCHMARK	OC	ON CENTER
BPRD	BEND PARKS & RECREATION DISTRICT	OD	OUTSIDE DIAMETER
BS	BOTTOM OF STAIR	OFCI	OWNER FURNISHED CONTRACTOR INSTALLED
BR	BOTTOM OF RAMP	PA	PLANTING AREA
BOW	BOTTOM OF WALL (ELEV. BELOW FINISH GRADE)	PC	POINT OF CURVATURE
BW	BOTTOM OF WALL (ELEV. AT FINISH GRADE)	PCC	POINT OF COMPOUND CURVATURE / PORTLAND
CB	CATCH BASIN		CEMENT CONCRETE
CF	CUBIC FEET	PI	POINT OF INTERSECTION
CAL	CALIPER	PIP	POURED-IN-PLACE
CJ	CONTRACTION JOINT	PL	PLATE
CLR	CLEAR	PLS	PURE LIVE SEED
CIP	CAST-IN-PLACE	POT	POINT OF TANGENCY
CONT	CONTAINER / CONTINUOUS	PRC	POINT OF REVERSE CURVATURE
CL / ℄	CENTER LINE	PT	PRESSURE TREATED
CP	CENTER POINT	PERF	PERFORATED
CT	CURRENT TRANSFORMER	PK	POINT KNOWN
DIM	DIMENSION	PP	POWER POLE
DIA	DIAMETER	PVC	POLYVINYL CHLORIDE PIPE
DEMO	DEMOLISH	R	RADIUS
DOM	DOMESTIC WATER LINE	REF	REFERENCE
(E)	EXISTING	REINF	REINFORCED / REINFORCEMENT
EA	EACH	REQ'D	REQUIRED
EJ	EXPANSION JOINT	ROW	RIGHT-OF-WAY
ELC	EXTERIOR LIGHTING CONTROL	RPZ	ROOT PROTECTION ZONE
ELEV	ELEVATION	RT	RIGHT
ENG	ENGINEER	SAN	SANITARY
EOP	EDGE OF PAVEMENT	SD	STORM DRAIN
EP	END POINT	SEC	SECONDARY
EQ	EQUAL	SIM	SIMILAR
EST	ESTIMATE	SS	SANITARY SEWER
FB	FLAT BAR	SSTL	STAINLESS STEEL
FD	FIELD DRAIN	STA	STATION
FG	FINISH GRADE	STD	STANDARD
FL	FLOW LINE	STR	STRUCTURAL
FOC	FACE OF CURB	TD	TRENCH DRAIN
FTG	FOOTING	TEL	TELEPHONE
GALV	GALVANIZED	THK	THICK
GA	GAUGE	TOPO	TOPOGRAPHY
GFI	GROUND FAULT INTERRUPTER	TC	TOP OF CURB
GB	GROUND BREAK	TR	TOP OF RAMP
GND	GROUND	TS	TOP OF STAIR
HDG	HOT DIP GALVANIZED	TPZ	TREE PROTECTION ZONE
HMAC	HOT MIX ASPHALT CONCRETE	TYP	TYPICAL
MHMAC	MINOR HOT MIX ASPHALT CONCRETE	TW	TOP OF WALL
HORIZ	HORIZONTAL	UG	UNDERGROUND
HP	HIGH POINT	VIF	VERIFY IN FIELD
HSS	HOLLOW STRUCTURAL SECTION	VAR	VARIES
ID	INSIDE DIAMETER	VC	VERTICAL CURVE
IE	INVERT ELEVATION	VOL	VOLUME
INT	INTERMEDIATE	W/	WITH
IR	IRON ROD	W/O	WITHOUT
JT	JOINT	WM	WATER METER
LT	LEFT	WP	WORK POINT
LF	LINEAR FEET	WT	WEIGHT
LP	LOW POINT	WWM	WELDED WIRE MESH
		YD	YARD

SYMBOLS LEGEND

SYMBOL	ITEM
XXX	LEADER LABEL
TYP 1	REFERENCE KEYNOTE
XXX X LX.XX	DETAIL REFERENCE
X LX.XX	ELEVATION DETAIL REFERENCE
X LX.XX	SECTION DETAIL REFERENCE
X	SECTION REFERENCE (WITHIN DETAIL)
X	ELEVATION REFERENCE (WITHIN DETAIL)
X LX.XX	ENLARGEMENT REFERENCE
1'-0"	LINEAR DIMENSION
R=3"	RADIUS DIMENSION
90°	ANGLE DIMENSION
MATCHLINE SEE SHEET LX.XX	SHEET MATCHLINE
SCALE: 1" = 10'-0" 0' 5' 10' 20'	SCALE BAR
NORTH	NORTH ARROW
#	REVISION TRIANGLE AND CLOUD
LIMIT OF WORK	LIMIT OF WORK LINE

SITE DETAIL KEYNOTE SYSTEM LEGEND

SITE DETAIL KEYNOTES

1.0 PAVING / CURBS / RAMPS

NUMBER	ITEM	DETAIL / SHEET	SPEC SECTION
1.1		XX / LX.XX	000000
1.2		XX / LX.XX	000000
1.3		XX / LX.XX	000000
1.4		XX / LX.XX	000000
1.5		XX / LX.XX	000000
1.6		XX / LX.XX	000000

KEYNOTE CATEGORY HEADING NUMBER AND TITLE

KEYNOTE CALLOUT REFERENCE NUMBERS

DETAIL TITLE

DETAIL NUMBER AND SHEET LOCATION

SPECIFICATION SECTION

THE FOLLOWING KEYNOTE CATEGORIES HAVE BEEN PROPOSED IN THIS PROJECT:

1.0 PAVING / CURBS / RAMPS
2.0 JOINTING
3.0 STAIRS
4.0 WALLS
5.0 SITE FURNISHINGS
6.0 RAILINGS
7.0 DRAINAGE
8.0 IRRIGATION
9.0 PLANTING
10.0 PLAY
11.0 LIGHTING

1.1 — SITE DETAIL KEYNOTE

DETAIL FRAME LEGEND

TITLE/DESCRIPTION

DETAIL REFERENCE NUMBER

DRAWING TYPE

X TITLE SECTION

SCALE NOTATION

SCALE: 1" = 1"

0" 1/4" 1/2" 1"

SCALE BAR

GREEN WORKS
LANDSCAPE ARCHITECTURE
ENVIRONMENTAL DESIGN
110 SE Main St., Suite 100
Portland, OR 97214
Ph: 503.222.5612
Fax: 503.222.2283
Email: info@greenworkspc.com

LICENSED LANDSCAPE ARCHITECT BENJAMIN JOHNSON 6362 Signature Renewal Date Date STATE OF CALIFORNIA

VERIFY SCALE: DRAWINGS ARE TO SCALE IF BAR MEASURES 1" 0" 1/2" 1"

CITY OF CRESCENT CITY CALIFORNIA 1854

Project: Beachfront Park Clean CA
City of Crescent City
377 J STREET
CRESCENT CITY, CA, 95531
707-464-9506
ewier@crescentcity.org

Submittal: BID SET

Sheet Title: General Legends And Notes

© GREENWORKS, P.C. 2024, ALL RIGHTS RESERVED
THESE DRAWINGS ARE THE PROPERTY OF GREENWORKS, P.C., AND ARE NOT TO BE USED OR REPRODUCED IN ANY MANNER, EXCEPT WITH THE PRIOR WRITTEN PERMISSION OF GREENWORKS, P.C.

Date:	05/09/2025
Revisions:	
Drawn By:	SS/MM/PG
Checked By:	BJ/GM
Job No.	220065
Approved:	BJ

G0.02

Sheet No. 3 of 63

G:\PROJECTS\220065.1_CRESCENT_CITY_BEACHFRONT_PARK\02_CLEAN_CA\02_PRODUCTION\01_CAD\01_PLOT_SHEETS\220065_COVR_CCA.DWG

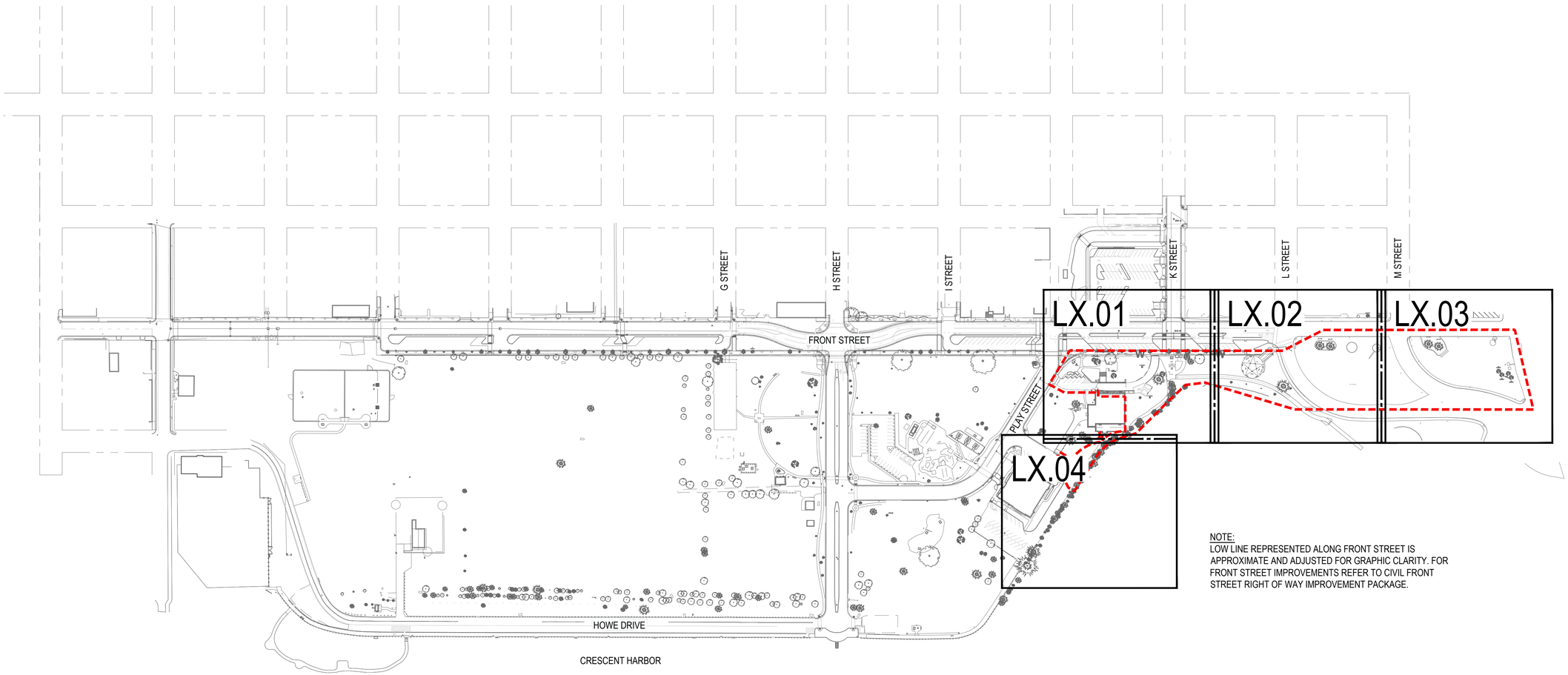

NOTE:
LOW LINE REPRESENTED ALONG FRONT STREET IS APPROXIMATE AND ADJUSTED FOR GRAPHIC CLARITY. FOR FRONT STREET IMPROVEMENTS REFER TO CIVIL FRONT STREET RIGHT OF WAY IMPROVEMENT PACKAGE.

NORTH

SCALE: 1" = 150'-0"

0' 75' 150' 300'

GREEN WORKS
LANDSCAPE ARCHITECTURE
ENVIRONMENTAL DESIGN
110 SE Main St., Suite 100
Portland, OR 97214
Ph: 503 222 5612
Fax: 503 222 2283
Email: info@greenworkspc.com

LICENSED LANDSCAPE ARCHITECT
BENJAMIN JOHNSON 6193
Signature
Renewal Date
Date
STATE OF CALIFORNIA

VERIFY SCALE: DRAWINGS ARE TO SCALE IF BAR MEASURES 1"
0" 1/2" 1"

CITY OF CRESCENT CITY CALIFORNIA 1854

Project:
Beachfront Park
Clean CA
City of Crescent City
377 J STREET
CRESCENT CITY, CA, 95531
707-464-9506
ewier@crescentcity.org

Submittal: BID SET

Sheet Title:
Overall Plan

© GREENWORKS, P.C.
2024, ALL RIGHTS RESERVED

THESE DRAWINGS ARE THE PROPERTY OF GREENWORKS, P.C., AND ARE NOT TO BE USED OR REPRODUCED IN ANY MANNER, EXCEPT WITH THE PRIOR WRITTEN PERMISSION OF GREENWORKS, P.C.

Date:	05/09/2025
Revisions:	
Drawn By:	SS/MM/PG
Checked By:	BJ/GM
Job No.	220065
Approved:	BJ

G0.03

Sheet No. 4 of 63

G:\PROJECTS\220065.1_CRESCENT_CITY_BEACHFRONT_PARK\02_CLEAN_CA\02_PRODUCTION\01_CAD\01_PLOT_SHEETS\220065_COVR_CCA.DWG

EXISTING CONDITIONS LEGEND

SYMBOL	ITEM
	REDWOOD TREE
	DECIDUOUS TREE
	PINE TREE
	CYPRESS TREE
	SHRUBS
	STUMP
205	MINOR CONTOUR
205	MINOR CONTOUR
	CONCRETE PAVING
	CHAIN-LINK FENCE
	WOOD FENCE
	WOOD POST METAL GUARDRAIL
	CONCRETE POST LARGE LINK CHAIN
sd	STORM DRAIN LINE
ss	SANITARY SEWER LINE
w	WATER LINE
	DRAIN
	STORM DRAIN LINE
ELEC	ELECTRICAL SERVICE BOX
CO	SEWER CLEANOUT
HB	HOSE BIB
WV	WATER VALVE
	HYDRANT
S	MANHOLE
	WHEEL STOP
	PICNIC TABLE
	TRASH AND RECYCLING RECEPTACLE
	LIGHT POLE
	SIGN
	DISC GOLF TEE
	POST

LIST OF MONUMENTS - CCA

NUMBER	ITEM
M1	POINT OF HONOR: DEL NORTE COUNTY VETERAN'S MEMORIAL MONUMENT
M2	ROCK MONUMENT (MISSING PLAQUE)
M3	JETTY DOLOSSE AND TETRAPODS

GREEN WORKS

LANDSCAPE ARCHITECTURE
ENVIRONMENTAL DESIGN

110 SE Main St., Suite 100
Portland, OR 97214
Ph: 503 222 5612
Fax: 503 222 2283
Email: info@greenworkspc.com

LICENSED LANDSCAPE ARCHITECT
BENJAMIN JOHNSON 6183
Signature
Renewal Date
Date
STATE OF CALIFORNIA

VERIFY SCALE: DRAWINGS ARE TO SCALE IF BAR MEASURES 1"
0" 1/2" 1"

CITY OF CRESCENT CITY
1854
CALIFORNIA

Project:
Beachfront Park
Clean CA
City of Crescent City
377 J STREET
CRESCENT CITY, CA, 95531
707-464-9506
ewier@crescentcity.org

Submittal: BID SET

Sheet Title:
Existing Conditions Notes And Legend

© GREENWORKS, P.C.
2024, ALL RIGHTS RESERVED

THESE DRAWINGS ARE THE PROPERTY OF GREENWORKS, P.C., AND ARE NOT TO BE USED OR REPRODUCED IN ANY MANNER, EXCEPT WITH THE PRIOR WRITTEN PERMISSION OF GREENWORKS, P.C.

Date:	05/09/2025
Revisions:	
Drawn By:	SS/MM/PG
Checked By:	BJ/GM
Job No.	220065
Approved:	BJ

L1.00

Sheet No. 5 of 63

G:\PROJECTS\220065.1_CRESCENT_CITY_BEACHFRONT_PARK\02_CLEAN_CA\02_PRODUCTION\01_CAD\01_PLOT_SHEETS\220065_EXCD_CCA.DWG

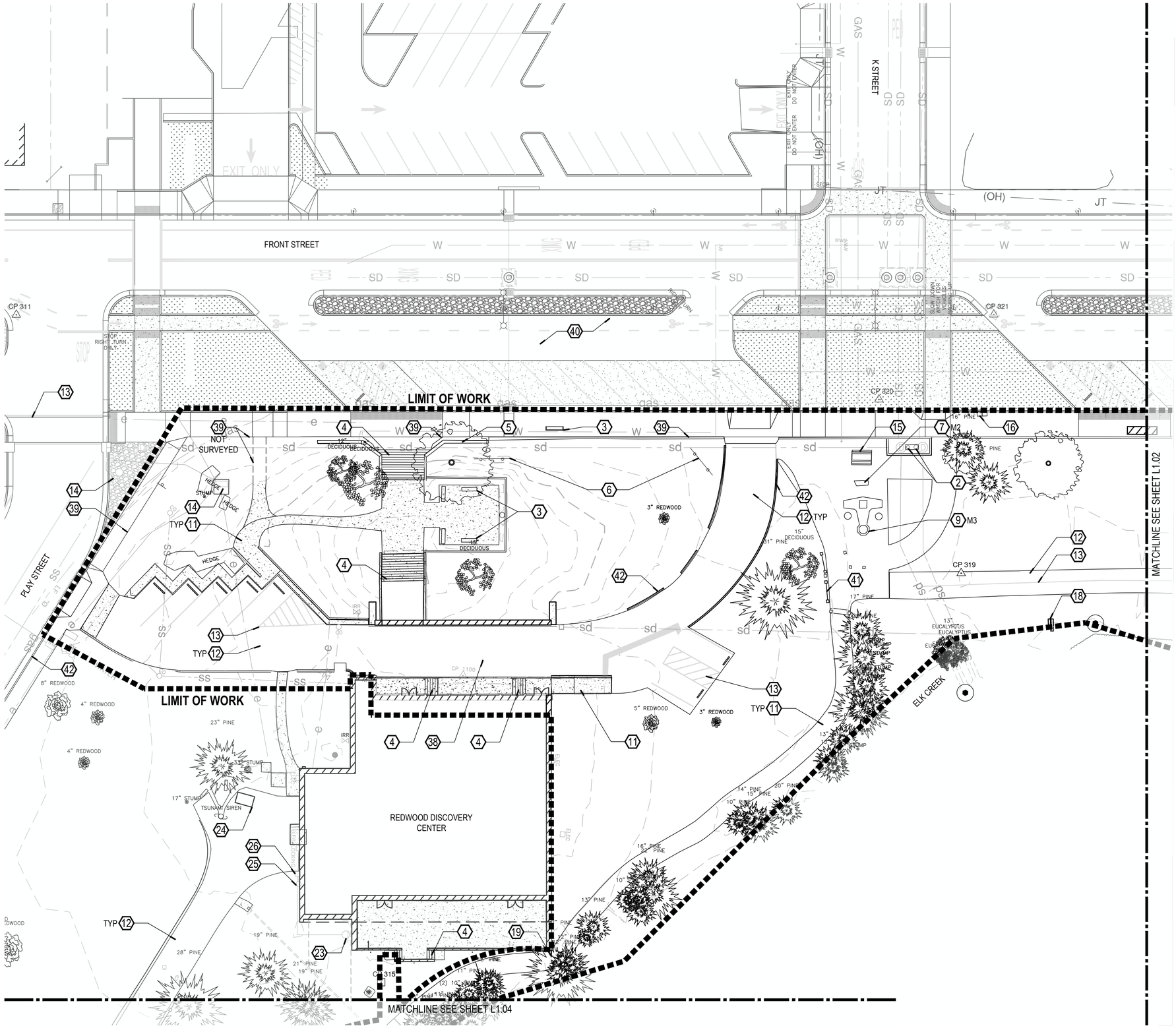

EXISTING CONDITIONS KEY NOTES

1. WAYPOINT
2. BOLLARD
3. CONCRETE BENCH
4. CONCRETE STAIRS
5. CONCRETE WALL
6. SIGNS: "VISITOR INFORMATION CHAMBER OF COMMERCE" AT EXIT AND ENTRANCE.
7. MONUMENT: SEE CORRESPONDING TABLE ON L1.00
8. MONUMENT: SEE CORRESPONDING TABLE ON L1.00
9. MONUMENT: SEE CORRESPONDING TABLE ON L1.00
10. WOOD BENCH
11. CONCRETE PAVING
12. ASPHALT PAVING
13. STRIPING
14. SEE CIVIL FOR EXISTING UTILITIES.
15. CONCRETE PICNIC TABLE
16. TRASH AND RECYCLING RECEPTACLE
17. BUS STOP
18. SIGN: DUAL SIDED - IMPORTANT BIRDS
19. METAL GUARDRAIL
20. ELK CREEK (CULVERT)
21. VEGETATION BRUSH LINE. ENVIRONMENTALLY SENSITIVE AREA.
22. STORM DRAIN INLET
23. PROPANE TANK
24. DUMPSTER
25. GAS SERVICE
26. GAS METER
27. SIGN: RIGHT TURN 25MPH
28. SIGN: LOGO
29. SIGN: WELCOME TO CRESCENT CITY
30. SIGN: NO RIGHT TURN
31. SIGN: DO NOT ENTER/ WRONG WAY/ ONE WAY
32. SIGN: THREE LANE DIRECTIONAL
33. SIGN: TOURIST INFORMATION
34. SIGN: SPLIT LANE
35. SIGN: NORTH US 101 LEFT ARROW
36. STORM DRAIN CULVERT
37. LIGHT POLE
38. PORTE COCHERE
39. FRONT STREET LINEWORK SHOWN FOR REFERENCE ONLY. CONTRACTOR TO VERIFY EDGE CONDITIONS.
40. EXISTING CONDITIONS AT FRONT STREET SHOWS THE PROPOSED ROW IMPROVEMENTS. SEE FRONT STREET IMPROVEMENT PLANS BY CIVIL.
41. EXISTING FENCE: CONCRETE POST LARGE LINK CHAIN.
42. EXISTING CONCRETE CURB.

WOLF'S EVENING PRIMROSE LEGEND

SYMBOL	ITEM
●	NATIVE
▲	INVASIVE / HYBRID
■	NON-FLOWERING
⬢	NON-DETECT

LOCATIONS OF WOLF'S EVENING PRIMROSE ON THESE PLANS ARE APPROXIMATE - VERIFY LOCATIONS ON SITE.

KEY MAP

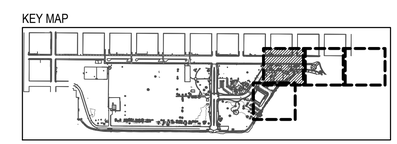

NORTH

SCALE: 1" = 20'-0"

0' 10' 20' 40'

GREEN WORKS
LANDSCAPE ARCHITECTURE
ENVIRONMENTAL DESIGN
110 SE Main St., Suite 100
Portland, OR 97214
Ph: 503 222 5612
Fax: 503 222 2283
Email: info@greenworkspc.com

LICENSED LANDSCAPE ARCHITECT
BENJAMIN JOHNSON 6182
Signature
Renewal Date
Date
STATE OF CALIFORNIA

VERIFY SCALE: DRAWINGS ARE TO SCALE IF BAR MEASURES 1"
0" 1/2" 1"

CITY OF CRESCENT CITY CALIFORNIA 1854

Project: Beachfront Park
Clean CA
City of Crescent City
377 J STREET
CRESCENT CITY, CA, 95531
707-464-9506
ewier@crescentcity.org

Submittal: BID SET

Sheet Title: Existing Conditions Plan

© GREENWORKS, P.C.
2024, ALL RIGHTS RESERVED

THESE DRAWINGS ARE THE PROPERTY OF GREENWORKS, P.C., AND ARE NOT TO BE USED OR REPRODUCED IN ANY MANNER, EXCEPT WITH THE PRIOR WRITTEN PERMISSION OF GREENWORKS, P.C.

Date:	05/09/2025
Revisions:	
Drawn By:	SS/MM/PG
Checked By:	BJ/GM
Job No.	220065
Approved:	BJ

L1.01

G:\PROJECTS\220065 I_CRESCENT_CITY_BEACHFRONT_PARK\02_CLEAN_CA\02_PRODUCTION\01_CAD\01_PLOT_SHEETS\220065_EXCD_CCA.DWG

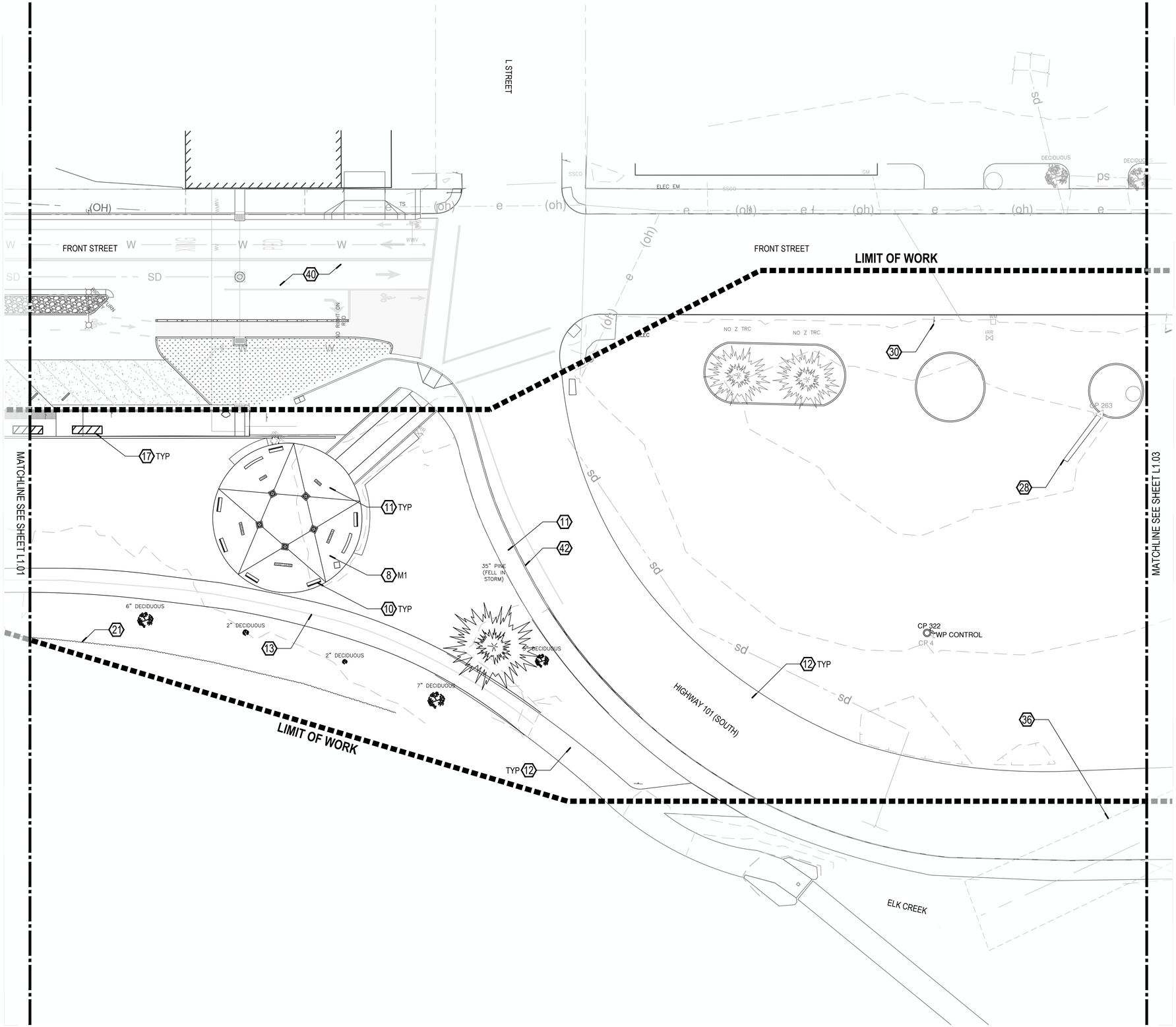

EXISTING CONDITIONS KEY NOTES

1. WAYPOINT
2. BOLLARD
3. CONCRETE BENCH
4. CONCRETE STAIRS
5. CONCRETE WALL
6. SIGNS: "VISITOR INFORMATION CHAMBER OF COMMERCE" AT EXIT AND ENTRANCE.
7. MONUMENT: SEE CORRESPONDING TABLE ON L1.00
8. MONUMENT: SEE CORRESPONDING TABLE ON L1.00
9. MONUMENT: SEE CORRESPONDING TABLE ON L1.00
10. WOOD BENCH
11. CONCRETE PAVING
12. ASPHALT PAVING
13. STRIPING
14. SEE CIVIL FOR EXISTING UTILITIES.
15. CONCRETE PICNIC TABLE
16. TRASH AND RECYCLING RECEPTACLE
17. BUS STOP
18. SIGN: DUAL SIDED - IMPORTANT BIRDS
19. METAL GUARDRAIL
20. ELK CREEK (CULVERT)
21. VEGETATION BRUSH LINE. ENVIRONMENTALLY SENSITIVE AREA.
22. STORM DRAIN INLET
23. PROPANE TANK
24. DUMPSTER
25. GAS SERVICE
26. GAS METER
27. SIGN: RIGHT TURN 25MPH
28. SIGN: LOGO
29. SIGN: WELCOME TO CRESCENT CITY
30. SIGN: NO RIGHT TURN
31. SIGN: DO NOT ENTER/ WRONG WAY/ ONE WAY
32. SIGN: THREE LANE DIRECTIONAL
33. SIGN: TOURIST INFORMATION
34. SIGN: SPLIT LANE
35. SIGN: NORTH US 101 LEFT ARROW
36. STORM DRAIN CULVERT
37. LIGHT POLE
38. PORTE COCHERE
39. FRONT STREET LINEWORK SHOWN FOR REFERENCE ONLY. CONTRACTOR TO VERIFY EDGE CONDITIONS.
40. EXISTING CONDITIONS AT FRONT STREET SHOWS THE PROPOSED ROW IMPROVEMENTS. SEE FRONT STREET IMPROVEMENT PLANS BY CIVIL.
41. EXISTING FENCE: CONCRETE POST LARGE LINK CHAIN.
42. EXISTING CONCRETE CURB.

WOLF'S EVENING PRIMROSE LEGEND

SYMBOL	ITEM
●	NATIVE
▲	INVASIVE / HYBRID
■	NON-FLOWERING
⬢	NON-DETECT

LOCATIONS OF WOLF'S EVENING PRIMROSE ON THESE PLANS ARE APPROXIMATE - VERIFY LOCATIONS ON SITE.

KEY MAP

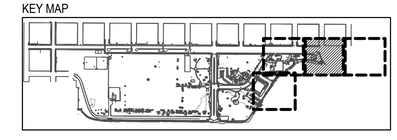

NORTH

SCALE: 1" = 20'-0"

0' 10' 20' 40'

GREEN WORKS
LANDSCAPE ARCHITECTURE
ENVIRONMENTAL DESIGN
110 SE Main St., Suite 100
Portland, OR 97214
Ph: 503 222 5612
Fax: 503 222 2283
Email: info@greenworkspc.com

LICENSED LANDSCAPE ARCHITECT
BENJAMIN JOHNSON 6183
Signature
Renewal Date
Date
STATE OF CALIFORNIA

VERIFY SCALE: DRAWINGS ARE TO SCALE IF BAR MEASURES 1"
0" 1/2" 1"

CITY OF CRESCENT CITY CALIFORNIA 1854

Project: Beachfront Park Clean CA
City of Crescent City
377 J STREET
CRESCENT CITY, CA, 95531
707-464-9506
ewier@crescentcity.org

Submittal: BID SET

Sheet Title: Existing Conditions Plan

© GREENWORKS, P.C. 2024, ALL RIGHTS RESERVED

THESE DRAWINGS ARE THE PROPERTY OF GREENWORKS, P.C., AND ARE NOT TO BE USED OR REPRODUCED IN ANY MANNER, EXCEPT WITH THE PRIOR WRITTEN PERMISSION OF GREENWORKS, P.C.

Date:	05/09/2025
Revisions:	
Drawn By:	SS/MM/PG
Checked By:	BJ/GM
Job No.	220065
Approved:	BJ

L1.02

Sheet No. 7 of 63

G:\PROJECTS\220065.1_CRESCENT_CITY_BEACHFRONT_PARK\02_CLEAN_CA\02_PRODUCTION\01_CAD\01_PLOT_SHEETS\220065_EXCD_CCA.DWG

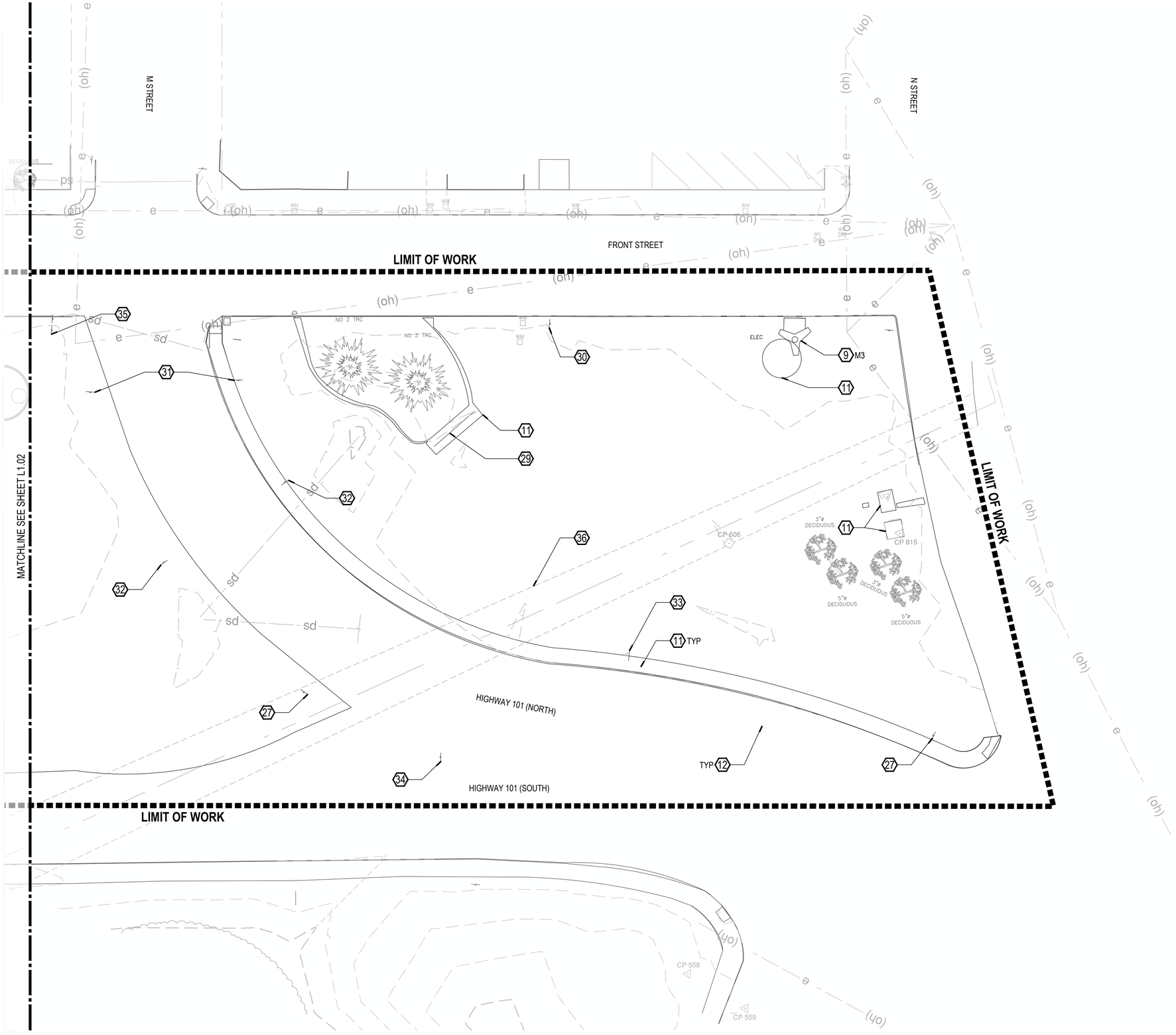

EXISTING CONDITIONS KEY NOTES

1. WAYPOINT
2. BOLLARD
3. CONCRETE BENCH
4. CONCRETE STAIRS
5. CONCRETE WALL
6. SIGNS: "VISITOR INFORMATION CHAMBER OF COMMERCE" AT EXIT AND ENTRANCE.
7. MONUMENT: SEE CORRESPONDING TABLE ON L1.00
8. MONUMENT: SEE CORRESPONDING TABLE ON L1.00
9. MONUMENT: SEE CORRESPONDING TABLE ON L1.00
10. WOOD BENCH
11. CONCRETE PAVING
12. ASPHALT PAVING
13. STRIPING
14. SEE CIVIL FOR EXISTING UTILITIES.
15. CONCRETE PICNIC TABLE
16. TRASH AND RECYCLING RECEPTACLE
17. BUS STOP
18. SIGN: DUAL SIDED - IMPORTANT BIRDS
19. METAL GUARDRAIL
20. ELK CREEK (CULVERT)
21. VEGETATION BRUSH LINE. ENVIRONMENTALLY SENSITIVE AREA.
22. STORM DRAIN INLET
23. PROPANE TANK
24. DUMPSTER
25. GAS SERVICE
26. GAS METER
27. SIGN: RIGHT TURN 25MPH
28. SIGN: LOGO
29. SIGN: WELCOME TO CRESCENT CITY
30. SIGN: NO RIGHT TURN
31. SIGN: DO NOT ENTER/ WRONG WAY/ ONE WAY
32. SIGN: THREE LANE DIRECTIONAL
33. SIGN: TOURIST INFORMATION
34. SIGN: SPLIT LANE
35. SIGN: NORTH US 101 LEFT ARROW
36. STORM DRAIN CULVERT
37. LIGHT POLE
38. PORTE COCHERE
39. FRONT STREET LINEWORK SHOWN FOR REFERENCE ONLY. CONTRACTOR TO VERIFY EDGE CONDITIONS.
40. EXISTING CONDITIONS AT FRONT STREET SHOWS THE PROPOSED ROW IMPROVEMENTS. SEE FRONT STREET IMPROVEMENT PLANS BY CIVIL.
41. EXISTING FENCE: CONCRETE POST LARGE LINK CHAIN.
42. EXISTING CONCRETE CURB.

WOLF'S EVENING PRIMROSE LEGEND

SYMBOL	ITEM
	NATIVE
	INVASIVE / HYBRID
	NON-FLOWERING
	NON-DETECT

LOCATIONS OF WOLF'S EVENING PRIMROSE ON THESE PLANS ARE APPROXIMATE - VERIFY LOCATIONS ON SITE.

KEY MAP

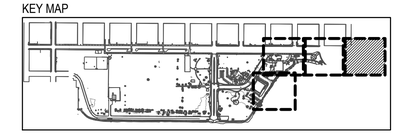

SCALE: 1" = 20'-0"

NORTH 0' 10' 20' 40'

GREEN WORKS
LANDSCAPE ARCHITECTURE
ENVIRONMENTAL DESIGN
110 SE Main St., Suite 100
Portland, OR 97214
Ph: 503 222 5612
Fax: 503 222 2283
Email: info@greenworkspc.com

LICENSED LANDSCAPE ARCHITECT
BENJAMIN JOHNSON #593
Signature
Renewal Date
Date
STATE OF CALIFORNIA

VERIFY SCALE: DRAWINGS ARE TO SCALE IF BAR MEASURES 1"
0" 1/2" 1"

CITY OF CRESCENT CITY CALIFORNIA 1854

Project:
Beachfront Park Clean CA
City of Crescent City
377 J STREET
CRESCENT CITY, CA, 95531
707-464-9506
ewier@crescentcity.org

Submittal: BID SET

Sheet Title:
Existing Conditions Plan

© GREENWORKS, P.C. 2024, ALL RIGHTS RESERVED

THESE DRAWINGS ARE THE PROPERTY OF GREENWORKS, P.C., AND ARE NOT TO BE USED OR REPRODUCED IN ANY MANNER, EXCEPT WITH THE PRIOR WRITTEN PERMISSION OF GREENWORKS, P.C.

Date:	05/09/2025
Revisions:	
Drawn By:	SS/MM/PG
Checked By:	BJ/GM
Job No.	220065
Approved:	BJ

L1.03

Sheet No. 8 of 63

G:\PROJECTS\220065.1_CRESCENT_CITY_BEACHFRONT_PARK\02_CLEAN_CA\02_PRODUCTION\01_CAD\01_PLOT_SHEETS\220065_EXCD_CCA.DWG

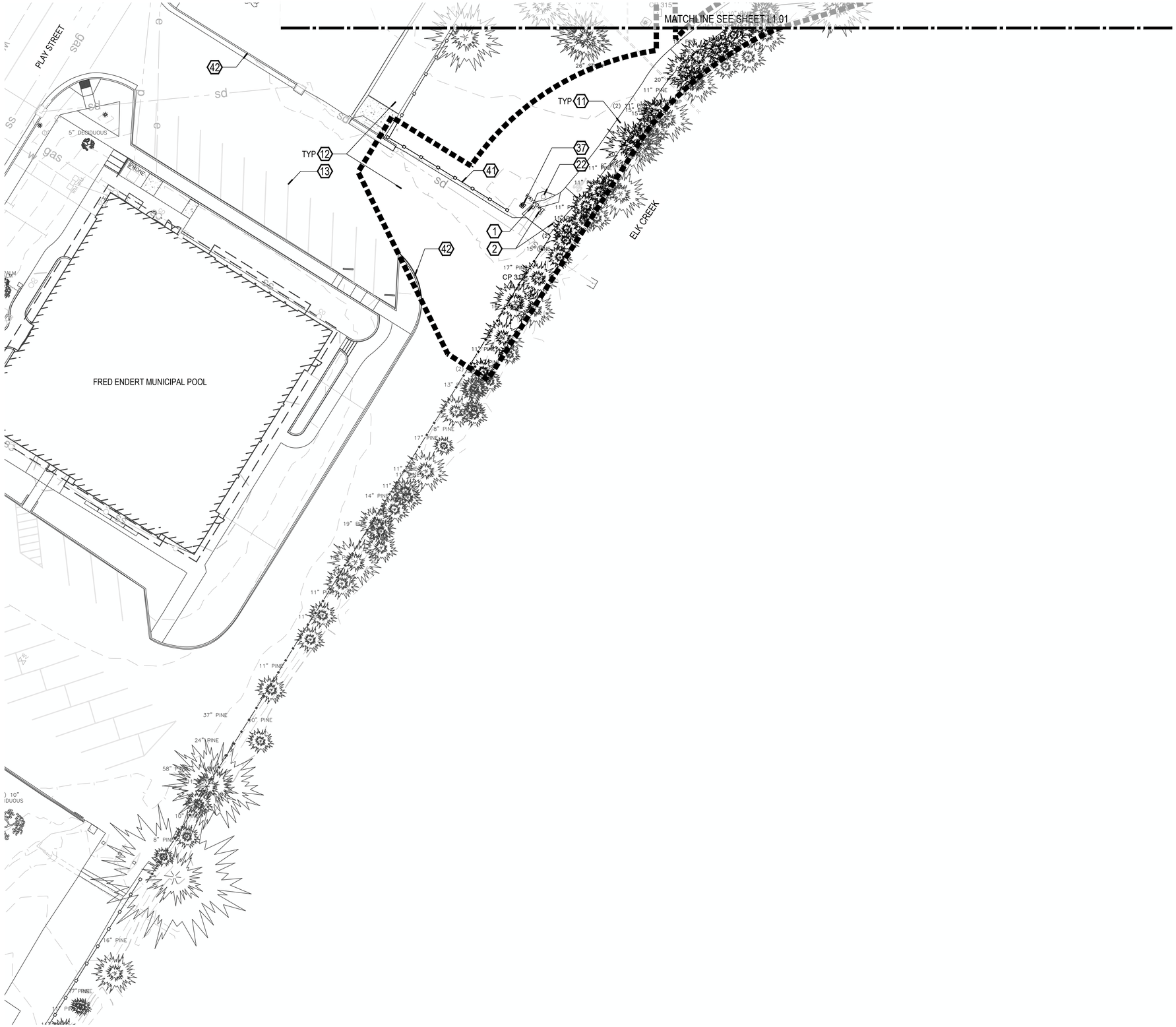

EXISTING CONDITIONS KEY NOTES

1. WAYPOINT
2. BOLLARD
3. CONCRETE BENCH
4. CONCRETE STAIRS
5. CONCRETE WALL
6. SIGNS: "VISITOR INFORMATION CHAMBER OF COMMERCE" AT EXIT AND ENTRANCE.
7. MONUMENT: SEE CORRESPONDING TABLE ON L1.00
8. MONUMENT: SEE CORRESPONDING TABLE ON L1.00
9. MONUMENT: SEE CORRESPONDING TABLE ON L1.00
10. WOOD BENCH
11. CONCRETE PAVING
12. ASPHALT PAVING
13. STRIPING
14. SEE CIVIL FOR EXISTING UTILITIES.
15. CONCRETE PICNIC TABLE
16. TRASH AND RECYCLING RECEPTACLE
17. BUS STOP
18. SIGN: DUAL SIDED - IMPORTANT BIRDS
19. METAL GUARDRAIL
20. ELK CREEK (CULVERT)
21. VEGETATION BRUSH LINE. ENVIRONMENTALLY SENSITIVE AREA.
22. STORM DRAIN INLET
23. PROPANE TANK
24. DUMPSTER
25. GAS SERVICE
26. GAS METER
27. SIGN: RIGHT TURN 25MPH
28. SIGN: LOGO
29. SIGN: WELCOME TO CRESCENT CITY
30. SIGN: NO RIGHT TURN
31. SIGN: DO NOT ENTER/ WRONG WAY/ ONE WAY
32. SIGN: THREE LANE DIRECTIONAL
33. SIGN: TOURIST INFORMATION
34. SIGN: SPLIT LANE
35. SIGN: NORTH US 101 LEFT ARROW
36. STORM DRAIN CULVERT
37. LIGHT POLE
38. PORTE COCHERE
39. FRONT STREET LINEWORK SHOWN FOR REFERENCE ONLY. CONTRACTOR TO VERIFY EDGE CONDITIONS.
40. EXISTING CONDITIONS AT FRONT STREET SHOWS THE PROPOSED ROW IMPROVEMENTS. SEE FRONT STREET IMPROVEMENT PLANS BY CIVIL.
41. EXISTING FENCE: CONCRETE POST LARGE LINK CHAIN.
42. EXISTING CONCRETE CURB.

WOLF'S EVENING PRIMROSE LEGEND

SYMBOL	ITEM
	NATIVE
	INVASIVE / HYBRID
	NON-FLOWERING
	NON-DETECT

LOCATIONS OF WOLF'S EVENING PRIMROSE ON THESE PLANS ARE APPROXIMATE - VERIFY LOCATIONS ON SITE.

KEY MAP

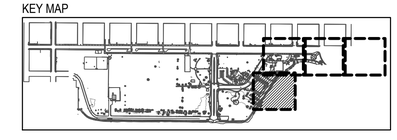

NORTH

SCALE: 1" = 20'-0"

0' 10' 20' 40'

GREEN WORKS
LANDSCAPE ARCHITECTURE
ENVIRONMENTAL DESIGN
110 SE Main St., Suite 100
Portland, OR 97214
Ph: 503 222 5612
Fax: 503 222 2283
Email: info@greenworkspc.com

LICENSED LANDSCAPE ARCHITECT
BENJAMIN JOHNSON #493
Signature
Renewal Date
Date
STATE OF CALIFORNIA

VERIFY SCALE: DRAWINGS ARE TO SCALE IF BAR MEASURES 1"
0" 1/2" 1"

CITY OF CRESCENT CITY CALIFORNIA 1854

Project:
Beachfront Park
Clean CA
City of Crescent City
377 J STREET
CRESCENT CITY, CA, 95531
707-464-9506
ewier@crescentcity.org

Submittal: BID SET

Sheet Title:
Existing Conditions Plan

© GREENWORKS, P.C.
2024, ALL RIGHTS RESERVED

THESE DRAWINGS ARE THE PROPERTY OF GREENWORKS, P.C., AND ARE NOT TO BE USED OR REPRODUCED IN ANY MANNER, EXCEPT WITH THE PRIOR WRITTEN PERMISSION OF GREENWORKS, P.C.

Date:	05/09/2025
Revisions:	
Drawn By:	SS/MM/PG
Checked By:	BJ/GM
Job No.	220065
Approved:	BJ

L1.04

Sheet No. 9 of 63

G:\PROJECTS\220065.1_CRESCENT_CITY_BEACHFRONT_PARK\02_CLEAN_CA\02_PRODUCTION\01_CAD\01_PLOT_SHEETS\220065_EXCD_CCA.DWG

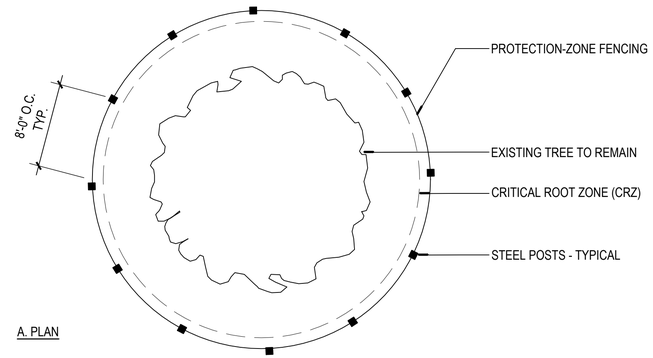

A. PLAN

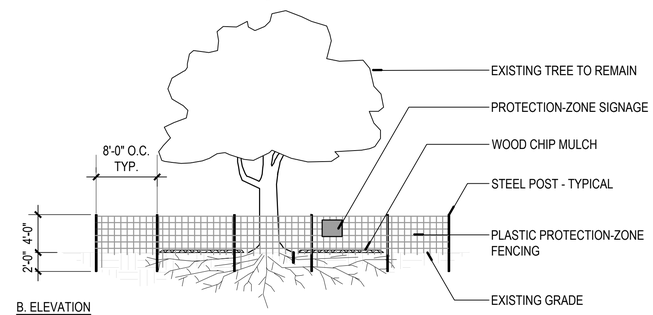

B. ELEVATION

NOTES:

1. DO NOT INSTALL ANY COMPONENT OF TREE PROTECTION FENCING WITHIN CRITICAL ROOT ZONES UNLESS INDICATED ON THE DRAWINGS OTHERWISE.
2. THE FOLLOWING PRACTICES ARE PROHIBITED WITHIN TREE PROTECTION ZONES: STORAGE OF CONSTRUCTION MATERIALS, DEBRIS, OR EXCAVATED MATERIAL; CLEANING OF MATERIALS OR EQUIPMENT; MOVING OR PARKING VEHICLES OR EQUIPMENT; FOOT TRAFFIC; ERECTION OF STRUCTURES; IMPOUNDMENT OF WATER; EXCAVATION OR OTHER DIGGING UNLESS OTHERWISE INDICATED; ATTACHMENT OF SIGNS TO OR WRAPPING MATERIALS AROUND TREES; USE OF FASTENERS OF ANY TYPE INTO THE TREE.
3. THE CITY OF CRESCENT CITY SHALL BE NOTIFIED WITHIN 24 HOURS OF ANY SUSPECTED DAMAGE TO EXISTING TREES WITHIN THE PROJECT AREA THAT WERE NOT IDENTIFIED AND APPROVED FOR REMOVAL OR RELOCATION. IF DAMAGE OCCURS DURING CONSTRUCTION, THE CONSTRUCTION APPLICANT SHALL HAVE THE TREE RESTORED WITHIN 24 HOURS BY A CERTIFIED ARBORIST.

1 TREE PROTECTION-ZONE FENCING

PLAN / SECTION — NOT TO SCALE

TREE PROTECTION LEGEND

SYMBOL	ITEM
	EXISTING REDWOOD TREE TO REMAIN
	EXISTING DECIDUOUS TREE TO REMAIN
	EXISTING PINE TREE TO REMAIN
	EXISTING CYPRESS TREE TO REMAIN
	EXISTING TREES TO BE REMOVED
	TREE PROTECTION FENCING
TPZ = X'	TREE PROTECTION ZONE (TPZ) DIMENSION
	TREE PROTECTION ZONE (TPZ) BASED ON DBH

GENERAL TREE PROTECTION AND REMOVAL NOTES

1. WOLF'S EVENING PRIMROSE TO BE PRESERVED AND PROTECTED UNLESS INVASIVE VARIETY.
2. NO CONSTRUCTION ACTIVITIES ALLOWED TO IMPACT ONE-HALF TREE PROTECTION ZONE (TPZ) AREA UNLESS OTHERWISE NOTED.
3. TRUNK PROTECTION AND SUPPLEMENTAL WATERING MAY BE REQUIRED AT THE DISCRETION OF THE PROJECT ARBORIST.
4. ANY CONSTRUCTION WORK INCLUDING BUT NOT LIMITED TO DEMOLITION, GRADING AND TRENCHING IN ANY TPZ SHALL ONLY BE DONE WITH WRITTEN APPROVAL FROM THE OWNER'S REPRESENTATIVE. CUT AND GRIND ALL STUMPS EXCEPT AS NOTED.
5. NO PARKING, EXCAVATION, TRENCHING, GRADING, ROOT PRUNING, STOCKPILING OF ANY MATERIALS OR OTHER ACTIVITIES SHALL OCCUR WITHIN THE TREE PROTECTION FENCING UNLESS APPROVED BY THE OWNER'S REPRESENTATIVE.
6. TREE PROTECTION FENCING NOT TO BE MOVED WITHOUT PRIOR APPROVAL OF THE OWNER'S REPRESENTATIVE.

GREEN WORKS
LANDSCAPE ARCHITECTURE
ENVIRONMENTAL DESIGN
110 SE Main St., Suite 100
Portland, OR 97214
Ph: 503 222 5612
Fax: 503 222 2283
Email: info@greenworkspc.com

LICENSED LANDSCAPE ARCHITECT
BENJAMIN JOHNSON 6183
Signature
Renewal Date
Date
STATE OF CALIFORNIA

VERIFY SCALE: DRAWINGS ARE TO SCALE IF BAR MEASURES 1"
0" 1/2" 1"

CITY OF CRESCENT CITY CALIFORNIA 1854

Project:
Beachfront Park
Clean CA
City of Crescent City
377 J STREET
CRESCENT CITY, CA, 95531
707-464-9506
ewier@crescentcity.org

Submittal: BID SET

Sheet Title:
Tree Protection Notes And Detail

© GREENWORKS, P.C. 2024, ALL RIGHTS RESERVED
THESE DRAWINGS ARE THE PROPERTY OF GREENWORKS, P.C., AND ARE NOT TO BE USED OR REPRODUCED IN ANY MANNER, EXCEPT WITH THE PRIOR WRITTEN PERMISSION OF GREENWORKS, P.C.

Date:	05/09/2025
Revisions:	
Drawn By:	SS/MM/PG
Checked By:	BJ/GM
Job No.	220065
Approved:	BJ

L2.00

Sheet No. 10 of 63

G:\PROJECTS\220065.1_CRESCENT_CITY_BEACHFRONT_PARK\02_CLEAN_CA\02_PRODUCTION\01_CAD\01_PLOT_SHEETS\220065_TREE_CCA.DWG

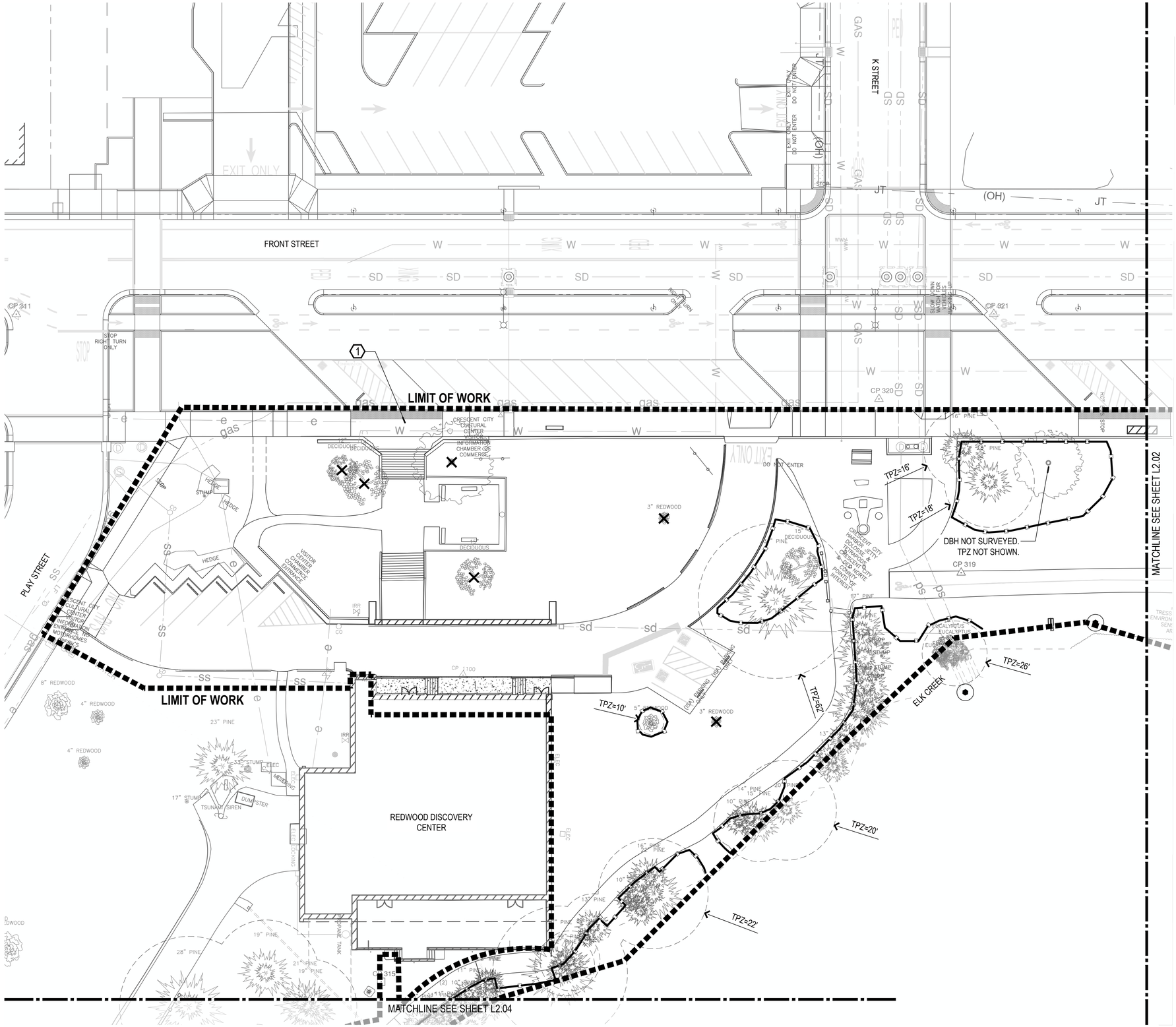

TREE PROTECTION LEGEND

SYMBOL	ITEM
	EXISTING REDWOOD TREE TO REMAIN
	EXISTING DECIDUOUS TREE TO REMAIN
	EXISTING PINE TREE TO REMAIN
	EXISTING CYPRESS TREE TO REMAIN
	EXISTING TREES TO BE REMOVED
	TREE PROTECTION FENCING
TPZ = X'	TREE PROTECTION ZONE (TPZ) DIMENSION
	TREE PROTECTION ZONE (TPZ) BASED ON DBH

WOLF'S EVENING PRIMROSE LEGEND

SYMBOL	ITEM
	NATIVE
	INVASIVE / HYBRID
	NON-FLOWERING
	NON-DETECT

LOCATIONS OF WOLF'S EVENING PRIMROSE ON THESE PLANS ARE APPROXIMATE - VERIFY LOCATIONS ON SITE.

TREE PROTECTION AND REMOVAL SHEET NOTES

1. SEE L2.00 FOR TREE PROTECTION-ZONE FENCING DETAIL, AND GENERAL TREE PROTECTION AND REMOVAL NOTES.
2. CRITICAL ROOT ZONES (CRZ) ARE SHOWN FOR TREES WITHIN THE LIMIT OF WORK THAT HAVE DBH IDENTIFIED IN THE SURVEY.

TREE PROTECTION AND REMOVAL KEY NOTES

1. SEE RIGHT-OF-WAY IMPROVEMENTS BY OTHERS FOR STREET TREE REMOVAL AND PROTECTION.
2. TREE PROTECTION FENCING TO END NEAR EXISTING WOOD POST METAL GUARDRAIL.

KEY MAP

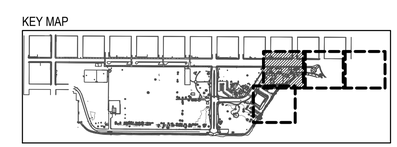

NORTH

SCALE: 1" = 20'-0"

0' 10' 20' 40'

GREEN WORKS
LANDSCAPE ARCHITECTURE
ENVIRONMENTAL DESIGN
110 SE Main St., Suite 100
Portland, OR 97214
Ph: 503 222 5612
Fax: 503 222 2283
Email: info@greenworkspc.com

LICENSED LANDSCAPE ARCHITECT
BENJAMIN JOHNSON 6183
Signature
Renewal Date
Date
STATE OF CALIFORNIA

VERIFY SCALE: DRAWINGS ARE TO SCALE IF BAR MEASURES 1"
0" 1/2" 1"

CITY OF CRESCENT CITY CALIFORNIA 1854

Project: Beachfront Park Clean CA
City of Crescent City
577 J STREET
CRESCENT CITY, CA, 95531
707-464-9506
ewier@crescentcity.org

Submittal: BID SET

Sheet Title: Tree Protection And Removal Plan

© GREENWORKS, P.C. 2024, ALL RIGHTS RESERVED
THESE DRAWINGS ARE THE PROPERTY OF GREENWORKS, P.C., AND ARE NOT TO BE USED OR REPRODUCED IN ANY MANNER, EXCEPT WITH THE PRIOR WRITTEN PERMISSION OF GREENWORKS, P.C.

Date:	05/09/2025
Revisions:	
Drawn By:	SS/MM/PG
Checked By:	BJ/GM
Job No.	220065
Approved:	BJ

L2.01

Sheet No. 11 of 63

G:\PROJECTS\220065.1_CRESCENT_CITY_BEACHFRONT_PARK\02_CLEAN_CA\02_PRODUCTION\01_CAD\01_PLOT_SHEETS\220065_TREE_CCA.DWG

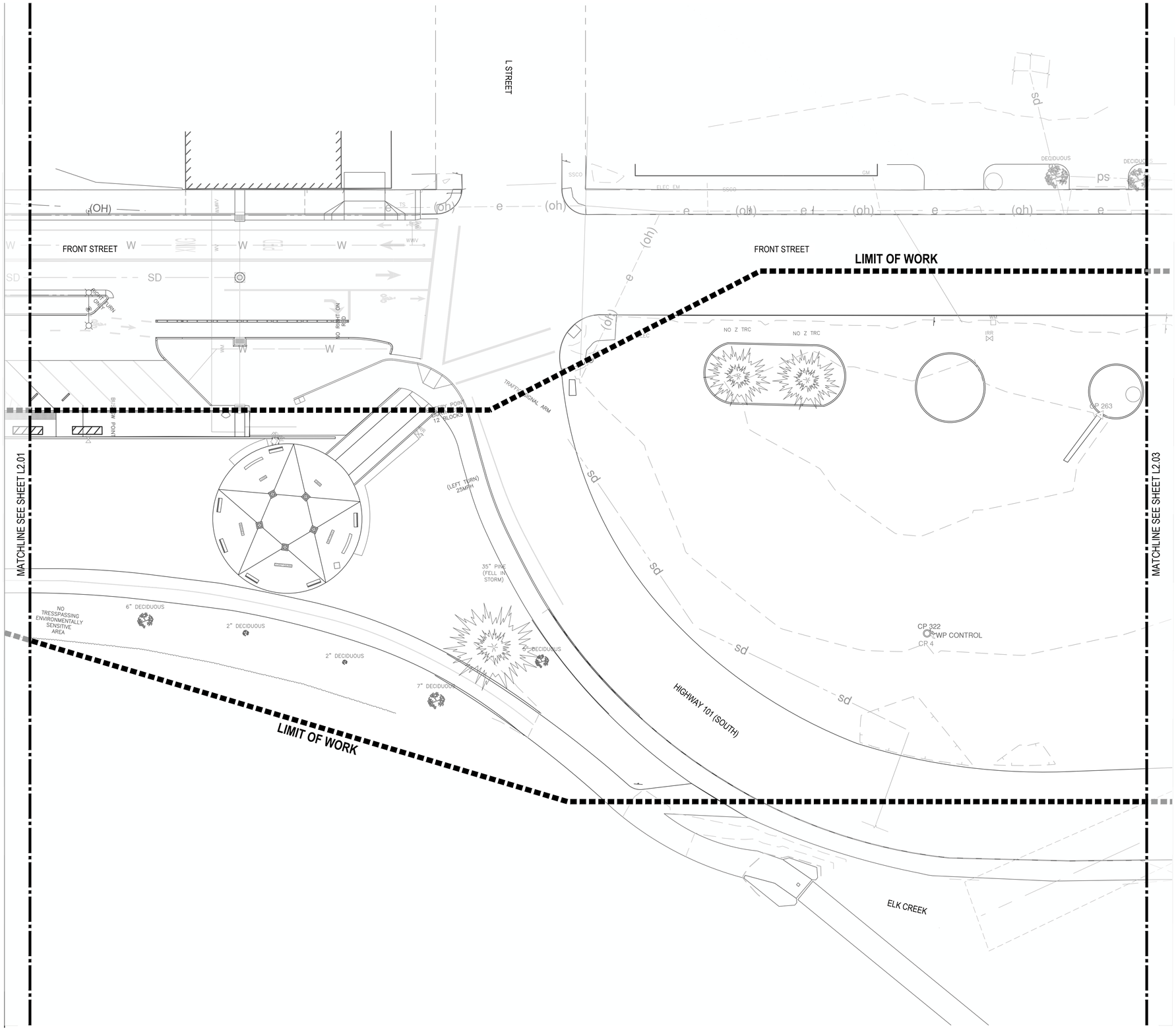

TREE PROTECTION LEGEND

SYMBOL	ITEM
	EXISTING REDWOOD TREE TO REMAIN
	EXISTING DECIDUOUS TREE TO REMAIN
	EXISTING PINE TREE TO REMAIN
	EXISTING CYPRESS TREE TO REMAIN
	EXISTING TREES TO BE REMOVED
	TREE PROTECTION FENCING
TPZ = X'	TREE PROTECTION ZONE (TPZ) DIMENSION
	TREE PROTECTION ZONE (TPZ) BASED ON DBH

WOLF'S EVENING PRIMROSE LEGEND

SYMBOL	ITEM
	NATIVE
	INVASIVE / HYBRID
	NON-FLOWERING
	NON-DETECT

LOCATIONS OF WOLF'S EVENING PRIMROSE ON THESE PLANS ARE APPROXIMATE - VERIFY LOCATIONS ON SITE.

TREE PROTECTION AND REMOVAL SHEET NOTES

1. SEE L2.00 FOR TREE PROTECTION-ZONE FENCING DETAIL, AND GENERAL TREE PROTECTION AND REMOVAL NOTES.
2. CRITICAL ROOT ZONES (CRZ) ARE SHOWN FOR TREES WITHIN THE LIMIT OF WORK THAT HAVE DBH IDENTIFIED IN THE SURVEY.

TREE PROTECTION AND REMOVAL KEY NOTES

1. SEE RIGHT-OF-WAY IMPROVEMENTS BY OTHERS FOR STREET TREE REMOVAL AND PROTECTION.
2. TREE PROTECTION FENCING TO END NEAR EXISTING WOOD POST METAL GUARDRAIL.

KEY MAP

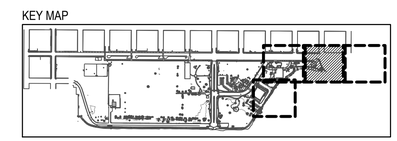

NORTH

SCALE: 1" = 20'-0"

0' 10' 20' 40'

GREEN WORKS
LANDSCAPE ARCHITECTURE
ENVIRONMENTAL DESIGN
110 SE Main St., Suite 100
Portland, OR 97214
Ph: 503 222 5612
Fax: 503 222 2283
Email: info@greenworkspc.com

LICENSED LANDSCAPE ARCHITECT
BENJAMIN JOHNSON 6183
Signature
Renewal Date
Date
STATE OF CALIFORNIA

VERIFY SCALE: DRAWINGS ARE TO SCALE IF BAR MEASURES 1"
0" 1/2" 1"

CITY OF CRESCENT CITY CALIFORNIA 1854

Project: Beachfront Park Clean CA
City of Crescent City
377 L STREET
CRESCENT CITY, CA, 95531
707-464-9506
ewier@crescentcity.org

Submittal: BID SET

Sheet Title: Tree Protection And Removal Plan

© GREENWORKS, P.C. 2024, ALL RIGHTS RESERVED

THESE DRAWINGS ARE THE PROPERTY OF GREENWORKS, P.C., AND ARE NOT TO BE USED OR REPRODUCED IN ANY MANNER, EXCEPT WITH THE PRIOR WRITTEN PERMISSION OF GREENWORKS, P.C.

Date:	05/09/2025
Revisions:	
Drawn By:	SS/MM/PG
Checked By:	BJ/GM
Job No.	220065
Approved:	BJ

L2.02

Sheet No. 12 of 63

G:\PROJECTS\220065.1_CRESCENT_CITY_BEACHFRONT_PARK\02_CLEAN_CA\02_PRODUCTION\01_CAD\01_PLOT_SHEETS\220065_TREE_CCA.DWG

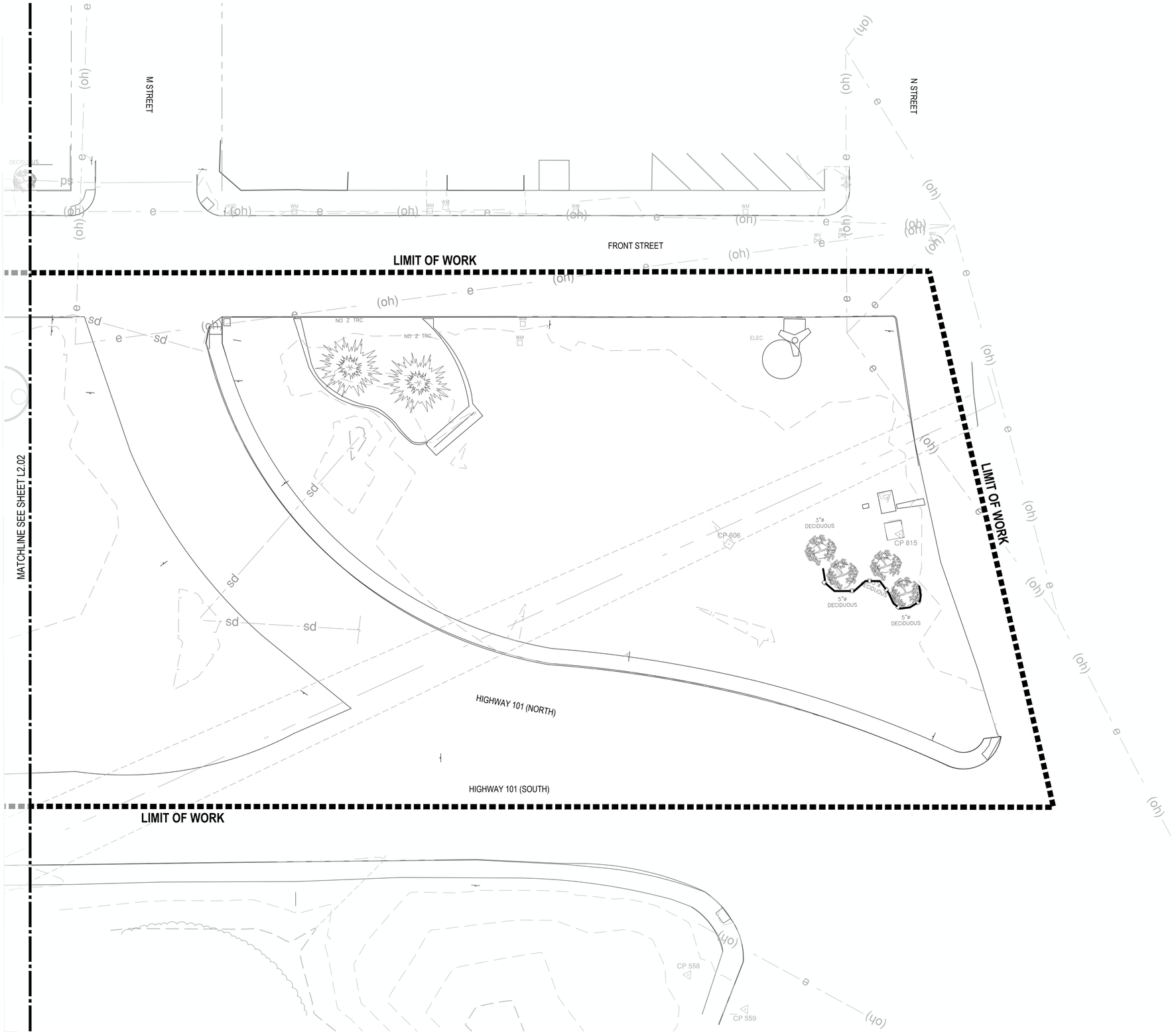

TREE PROTECTION LEGEND

SYMBOL	ITEM
	EXISTING REDWOOD TREE TO REMAIN
	EXISTING DECIDUOUS TREE TO REMAIN
	EXISTING PINE TREE TO REMAIN
	EXISTING CYPRESS TREE TO REMAIN
	EXISTING TREES TO BE REMOVED
	TREE PROTECTION FENCING
TPZ = X'	TREE PROTECTION ZONE (TPZ) DIMENSION
	TREE PROTECTION ZONE (TPZ) BASED ON DBH

WOLF'S EVENING PRIMROSE LEGEND

SYMBOL	ITEM
	NATIVE
	INVASIVE / HYBRID
	NON-FLOWERING
	NON-DETECT

LOCATIONS OF WOLF'S EVENING PRIMROSE ON THESE PLANS ARE APPROXIMATE - VERIFY LOCATIONS ON SITE.

TREE PROTECTION AND REMOVAL SHEET NOTES

1. SEE L2.00 FOR TREE PROTECTION-ZONE FENCING DETAIL, AND GENERAL TREE PROTECTION AND REMOVAL NOTES.
2. CRITICAL ROOT ZONES (CRZ) ARE SHOWN FOR TREES WITHIN THE LIMIT OF WORK THAT HAVE DBH IDENTIFIED IN THE SURVEY.

TREE PROTECTION AND REMOVAL KEY NOTES

1. SEE RIGHT-OF-WAY IMPROVEMENTS BY OTHERS FOR STREET TREE REMOVAL AND PROTECTION.
2. TREE PROTECTION FENCING TO END NEAR EXISTING WOOD POST METAL GUARDRAIL.

KEY MAP

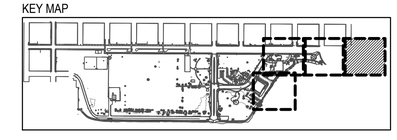

NORTH

SCALE: 1" = 20'-0"

0' 10' 20' 40'

GREEN WORKS
LANDSCAPE ARCHITECTURE
ENVIRONMENTAL DESIGN
110 SE Main St., Suite 100
Portland, OR 97214
Ph: 503 222 5612
Fax: 503 222 2283
Email: info@greenworkspc.com

LICENSED LANDSCAPE ARCHITECT
BENJAMIN JOHNSON 6183
Signature
Renewal Date
Date
STATE OF CALIFORNIA

VERIFY SCALE: DRAWINGS ARE TO SCALE IF BAR MEASURES 1"
0" 1/2" 1"

CITY OF CRESCENT CITY CALIFORNIA 1854

Project: Beachfront Park Clean CA
City of Crescent City
377 J STREET
CRESCENT CITY, CA, 95531
707-464-9506
ewier@crescentcity.org

Submittal: BID SET

Sheet Title: Tree Protection And Removal Plan

© GREENWORKS, P.C. 2024, ALL RIGHTS RESERVED
THESE DRAWINGS ARE THE PROPERTY OF GREENWORKS, P.C., AND ARE NOT TO BE USED OR REPRODUCED IN ANY MANNER, EXCEPT WITH THE PRIOR WRITTEN PERMISSION OF GREENWORKS, P.C.

Date:	05/09/2025
Revisions:	
Drawn By:	SS/MM/PG
Checked By:	BJ/GM
Job No.	220065
Approved:	BJ

L2.03

Sheet No. 13 of 63

G:\PROJECTS\220065.1_CRESCENT_CITY_BEACHFRONT_PARK\02_CLEAN_CA\02_PRODUCTION\01_CAD\01_PLOT_SHEETS\220065_TREE_CCA.DWG

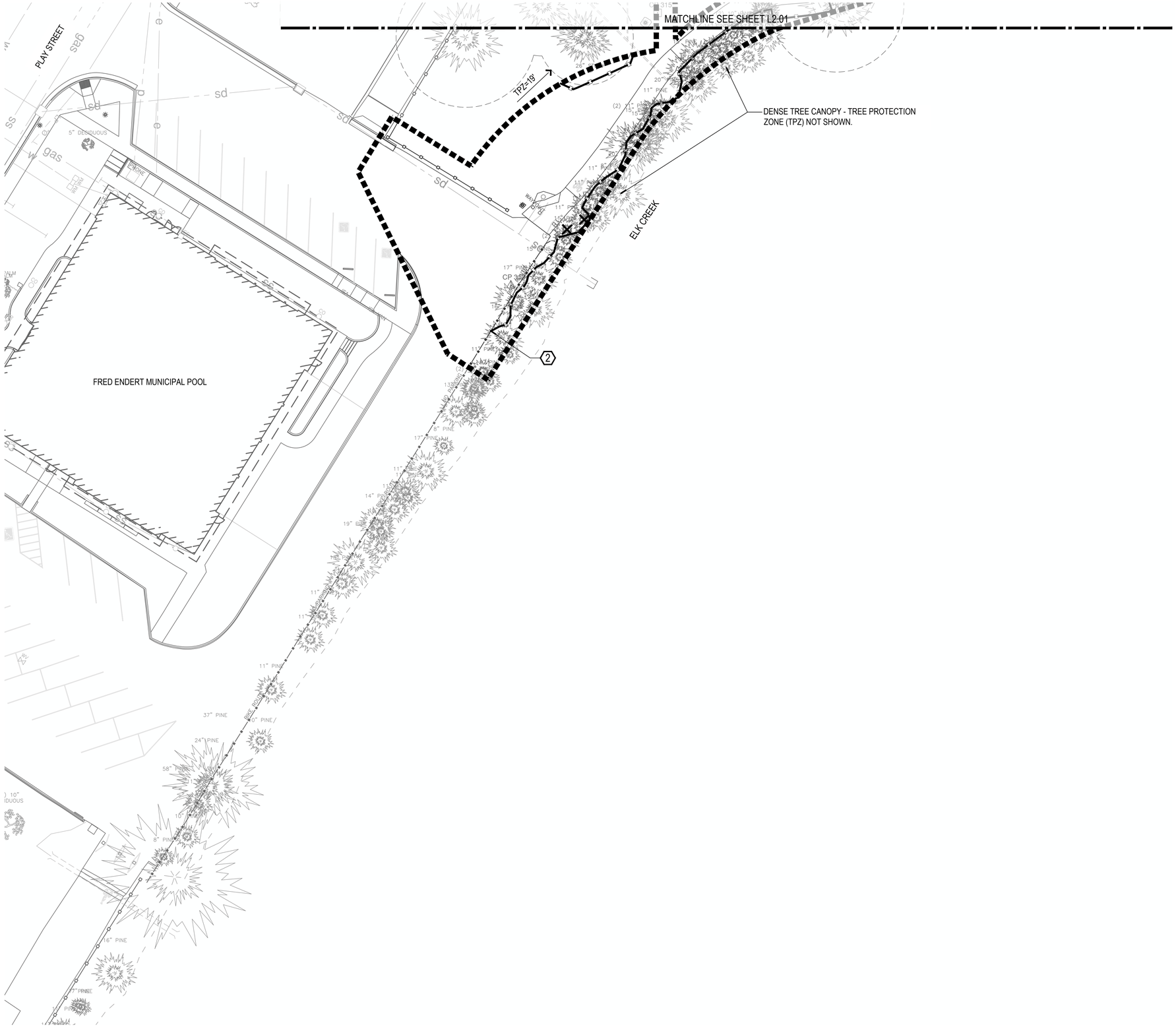

TREE PROTECTION LEGEND

SYMBOL	ITEM
	EXISTING REDWOOD TREE TO REMAIN
	EXISTING DECIDUOUS TREE TO REMAIN
	EXISTING PINE TREE TO REMAIN
	EXISTING CYPRESS TREE TO REMAIN
	EXISTING TREES TO BE REMOVED
	TREE PROTECTION FENCING
TPZ = X'	TREE PROTECTION ZONE (TPZ) DIMENSION
	TREE PROTECTION ZONE (TPZ) BASED ON DBH

WOLF'S EVENING PRIMROSE LEGEND

SYMBOL	ITEM
	NATIVE
	INVASIVE / HYBRID
	NON-FLOWERING
	NON-DETECT

LOCATIONS OF WOLF'S EVENING PRIMROSE ON THESE PLANS ARE APPROXIMATE - VERIFY LOCATIONS ON SITE.

TREE PROTECTION AND REMOVAL SHEET NOTES

1. SEE L2.00 FOR TREE PROTECTION-ZONE FENCING DETAIL, AND GENERAL TREE PROTECTION AND REMOVAL NOTES.
2. CRITICAL ROOT ZONES (CRZ) ARE SHOWN FOR TREES WITHIN THE LIMIT OF WORK THAT HAVE DBH IDENTIFIED IN THE SURVEY.

TREE PROTECTION AND REMOVAL KEY NOTES

1. SEE RIGHT-OF-WAY IMPROVEMENTS BY OTHERS FOR STREET TREE REMOVAL AND PROTECTION.
2. TREE PROTECTION FENCING TO END NEAR EXISTING WOOD POST METAL GUARDRAIL.

KEY MAP

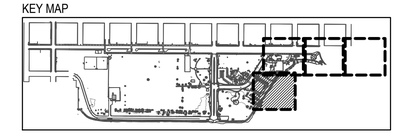

NORTH

SCALE: 1" = 20'-0"

0' 10' 20' 40'

GREEN WORKS
LANDSCAPE ARCHITECTURE
ENVIRONMENTAL DESIGN
110 SE Main St., Suite 100
Portland, OR 97214
Ph: 503 222 5612
Fax: 503 222 2283
Email: info@greenworkspc.com

LICENSED LANDSCAPE ARCHITECT
BENJAMIN JOHNSON 6183
Signature
Renewal Date
Date
STATE OF CALIFORNIA

VERIFY SCALE: DRAWINGS ARE TO SCALE IF BAR MEASURES 1"
0" 1/2" 1"

CITY OF CRESCENT CITY CALIFORNIA 1854

Project: Beachfront Park Clean CA

City of Crescent City
377 J STREET
CRESCENT CITY, CA, 95531
707-464-9506
ewier@crescentcity.org

Submittal: BID SET

Sheet Title: Tree Protection And Removal Plan

© GREENWORKS, P.C. 2024, ALL RIGHTS RESERVED

THESE DRAWINGS ARE THE PROPERTY OF GREENWORKS, P.C., AND ARE NOT TO BE USED OR REPRODUCED IN ANY MANNER, EXCEPT WITH THE PRIOR WRITTEN PERMISSION OF GREENWORKS, P.C.

Date:	05/09/2025
Revisions:	
Drawn By:	SS/MM/PG
Checked By:	BJ/GM
Job No.	220065
Approved:	BJ

L2.04

Sheet No. 14 of 63

G:\PROJECTS\220065.1_CRESCENT_CITY_BEACHFRONT_PARK\02_CLEAN_CA\02_PRODUCTION\01_CAD\01_PLOT_SHEETS\220065_TREE_CCA.DWG

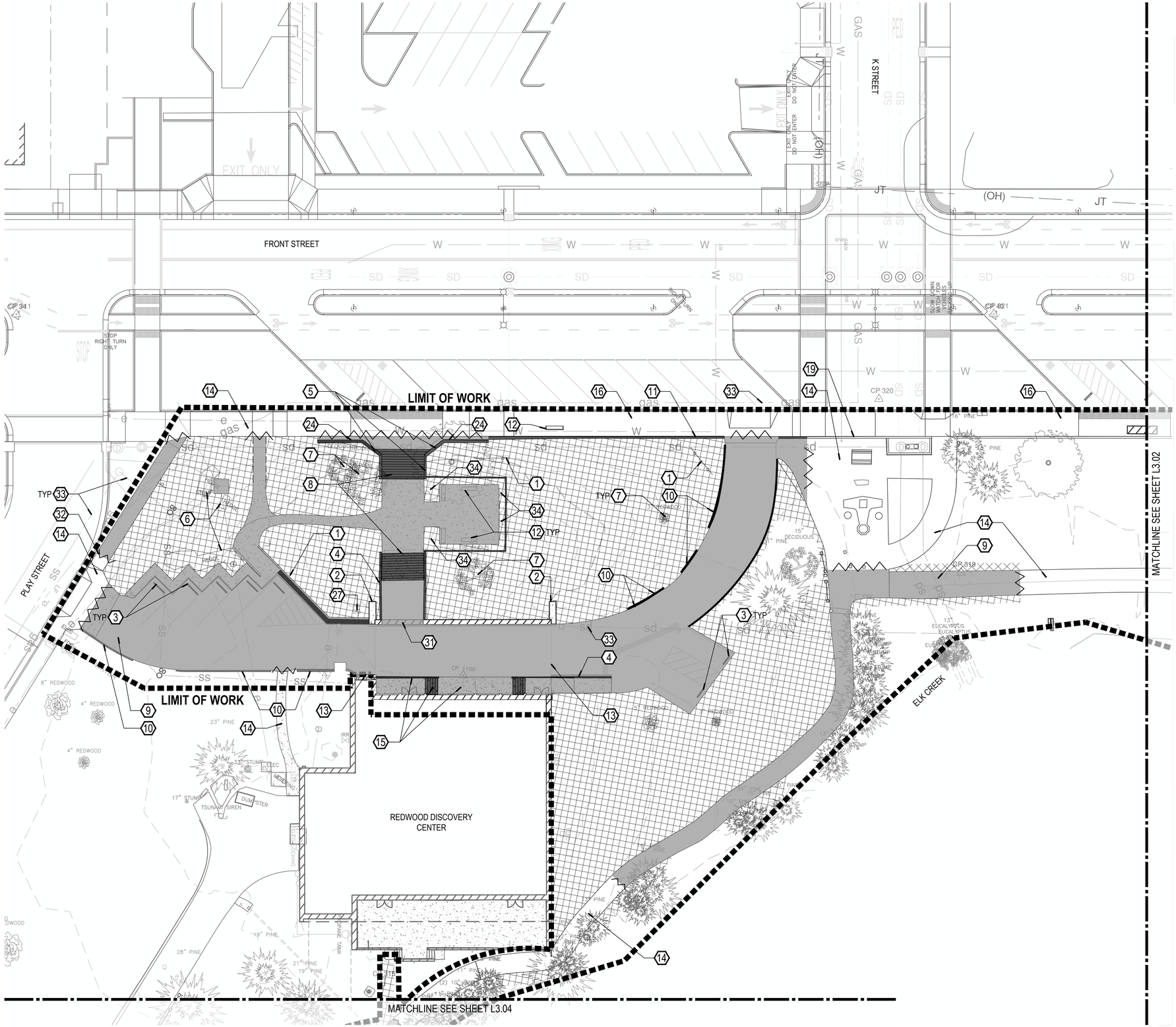

DEMOLITION LEGEND

SYMBOL	ITEM
	CLEAR AND GRUB LIMITS
	CONCRETE OR ASPHALT PAVING TO BE REMOVED
	CONCRETE WALLS & STEPS TO BE REMOVED
	CONCRETE CURBS TO BE REMOVED
	SAW CUT CONCRETE OR ASPHALT PAVING

GENERAL SITE DEMOLITION NOTES

1. ELEMENTS ON THE DRAWINGS SHOWN TO BE REMOVED SHALL BE REMOVED TO THEIR FULL DEPTHS OF THEIR CONSTRUCTION.
2. ITEMS THAT ARE ENCOUNTERED ON SITE (INCLUDING BELOW GRADE) THAT ARE NOT SHOWN ON THE DRAWINGS SHALL BE BROUGHT TO THE ATTENTION OF THE OWNER'S REPRESENTATIVE.
3. EROSION AND SEDIMENT CONTROL METHODS TO REMAIN IN PLACE DURING ALL CONSTRUCTION PHASES.
4. THE LOCATION OF EXISTING UTILITIES AS SHOWN ON THE DRAWINGS MAY VARY IN THE FIELD. ADDITIONAL UTILITIES MAY EXIST ON SITE BUT ARE NOT SHOWN ON THE DRAWINGS. VERIFY THE ACTUAL LOCATION OF ALL UTILITIES BEFORE ANY CONSTRUCTION ACTIVITIES COMMENCE. PRESERVE AND PROTECT EXISTING UTILITIES UNLESS OTHERWISE NOTED.
5. IT IS THE RESPONSIBILITY OF THE CONTRACTOR TO PROTECT THE CONSTRUCTION SITE AND THEIR EQUIPMENT.

SITE DEMOLITION REFERENCE NOTES

1. REMOVE EXISTING SIGN.
2. PROTECT EXISTING CONCRETE WALL/ COLUMNS.
3. REMOVE EXISTING CONCRETE WHEEL STOPS.
4. REMOVE EXISTING CONCRETE WALL AND RAILING.
5. REMOVE EXISTING CONCRETE RETAINING WALL.
6. REMOVE EXISTING HEDGES AND STUMPS.
7. SEE SHEET L2.00 FOR TREE PROTECTION AND REMOVAL NOTES.
8. REMOVE CONCRETE STAIRS.
9. REMOVE ASPHALT PAVING.
10. REMOVE CONCRETE CURBS.
11. REMOVE SEAWALL.
12. REMOVE CONCRETE BENCH.
13. BUILDING OVERHANG NOT SHOWN. PROTECT BUILDING FOUNDATION AND OVERHANG STRUCTURE DURING CONSTRUCTION.
14. PROTECT EXISTING PAVING.
15. REMOVE PAVING, STAIRS, RAILINGS AND WALLS IN THE PORTE COCHERE.
16. SIDEWALK AND CURB IN RIGHT-OF-WAY IN FRONT STREET IMPROVEMENT PACKAGE BY OTHERS (NIC).
17. REFERENCE NOTE NOT USED.
18. PROTECT EXISTING SIGN.
19. PROTECT EXISTING SEAWALL.
20. REFERENCE NOTE NOT USED.
21. SIGN TO BE RELOCATED.
22. REMOVE LIGHT POLE.
23. REMOVE STORM DRAIN INLET.
24. SALVAGE TILE ART ON WALLS.
25. REMOVE SEGMENT OF EXISTING FENCE - CONCRETE POST WITH CHAIN.
26. REMOVE SEGMENT OF EXISTING FENCE - WOOD POST METAL GUARDRAIL.
27. SALVAGE EXISTING CONTROL WIRES.
28. REFERENCE NOTE NOT USED.
29. PROTECT METAL GUARDRAIL (2 POSTS NORTH OF PROPOSED CURB).
30. PROTECT EXISTING FENCE - CONCRETE POST WITH CHAIN.
31. REMOVE SEGMENT OF EXISTING WALL, SEE STRUCTURAL FOR EXTENTS OF WALL DEMOLITION.
32. DEMO TO NEAREST EXISTING JOINT LINE.
33. VERIFY EXISTING UTILITIES WITH CIVIL.
34. DEMO INTERPRETIVE SIGNS (QTY 11). VERIFY QUANTITY IN THE FIELD.

X BID ALTERNATE LIST

2. BID ALTERNATE #2 - MEDIAN EXTENSION (ASPHALT REMOVAL AND SEEDED LAWN). SEE SHEET L4.00 MATERIALS NOTES AND LEGEND FOR BID ALT #1.

KEY MAP

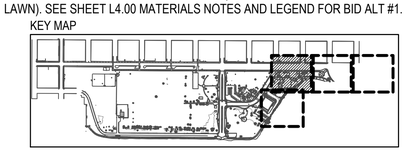

NORTH

SCALE: 1" = 20'-0"

0' 10' 20' 40'

GREENWORKS
LANDSCAPE ARCHITECTURE
ENVIRONMENTAL DESIGN
110 SE Main St., Suite 100
Portland, OR 97214
Ph: 503 222 5612
Fax: 503 222 2283
Email: info@greenworkspc.com

LICENSED LANDSCAPE ARCHITECT
BENJAMIN JOHNSON 6183
Signature
Renewal Date
Date
STATE OF CALIFORNIA

VERIFY SCALE: DRAWINGS ARE TO SCALE IF BAR MEASURES 1"
0" 1/2" 1"

CITY OF CRESCENT CITY CALIFORNIA 1854

Project:
Beachfront Park Clean CA
City of Crescent City
377 J STREET
CRESCENT CITY, CA, 95531
707-464-9506
ewier@crescentcity.org

Submittal: BID SET

Sheet Title:
Demolition Plan

© GREENWORKS, P.C.
2024, ALL RIGHTS RESERVED

THESE DRAWINGS ARE THE PROPERTY OF GREENWORKS, P.C., AND ARE NOT TO BE USED OR REPRODUCED IN ANY MANNER, EXCEPT WITH THE PRIOR WRITTEN PERMISSION OF GREENWORKS, P.C.

Date:	05/09/2025
Revisions:	
Drawn By:	SS/MM/PG
Checked By:	BJ/GM
Job No.	220065
Approved:	BJ

L3.01

Sheet No. 15 of 63

G:\PROJECTS\220065.1_CRESCENT_CITY_BEACHFRONT_PARK\02_CLEAN_CA\02_PRODUCTION\01_CADD\1_PLOT_SHEETS\220065_DEMO_CCA.DWG

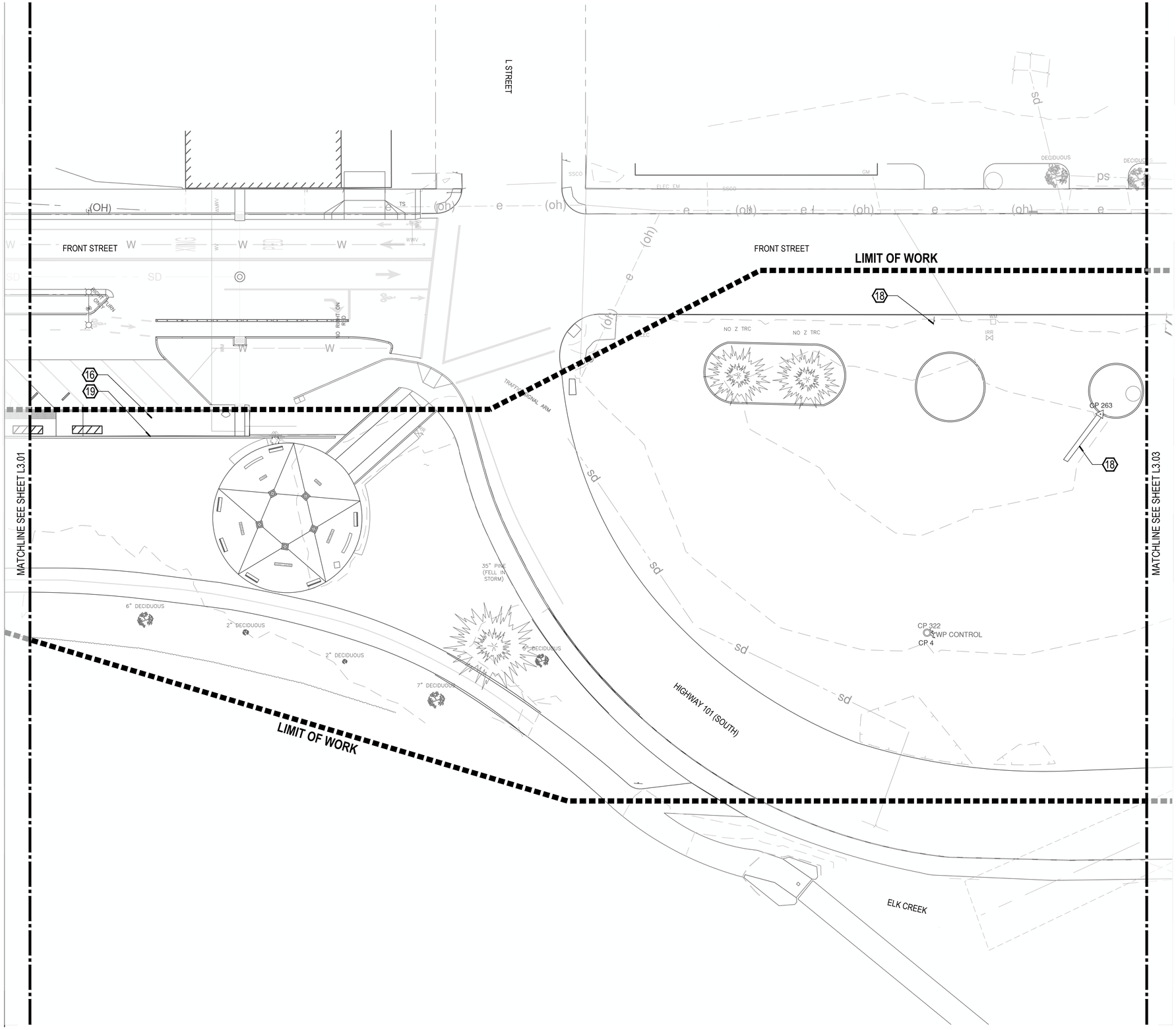

DEMOLITION LEGEND

SYMBOL	ITEM
	CLEAR AND GRUB LIMITS
	CONCRETE OR ASPHALT PAVING TO BE REMOVED
	CONCRETE WALLS & STEPS TO BE REMOVED
	CONCRETE CURBS TO BE REMOVED
	SAW CUT CONCRETE OR ASPHALT PAVING

GENERAL SITE DEMOLITION NOTES

1. ELEMENTS ON THE DRAWINGS SHOWN TO BE REMOVED SHALL BE REMOVED TO THEIR FULL DEPTHS OF THEIR CONSTRUCTION.
2. ITEMS THAT ARE ENCOUNTERED ON SITE (INCLUDING BELOW GRADE) THAT ARE NOT SHOWN ON THE DRAWINGS SHALL BE BROUGHT TO THE ATTENTION OF THE OWNER'S REPRESENTATIVE.
3. EROSION AND SEDIMENT CONTROL METHODS TO REMAIN IN PLACE DURING ALL CONSTRUCTION PHASES.
4. THE LOCATION OF EXISTING UTILITIES AS SHOWN ON THE DRAWINGS MAY VARY IN THE FIELD. ADDITIONAL UTILITIES MAY EXIST ON SITE BUT ARE NOT SHOWN ON THE DRAWINGS. VERIFY THE ACTUAL LOCATION OF ALL UTILITIES BEFORE ANY CONSTRUCTION ACTIVITIES COMMENCE. PRESERVE AND PROTECT EXISTING UTILITIES UNLESS OTHERWISE NOTED.
5. IT IS THE RESPONSIBILITY OF THE CONTRACTOR TO PROTECT THE CONSTRUCTION SITE AND THEIR EQUIPMENT.

SITE DEMOLITION REFERENCE NOTES

1. REMOVE EXISTING SIGN.
2. PROTECT EXISTING CONCRETE WALL/ COLUMNS.
3. REMOVE EXISTING CONCRETE WHEEL STOPS.
4. REMOVE EXISTING CONCRETE WALL AND RAILING.
5. REMOVE EXISTING CONCRETE RETAINING WALL.
6. REMOVE EXISTING HEDGES AND STUMPS.
7. SEE SHEET L2.00 FOR TREE PROTECTION AND REMOVAL NOTES.
8. REMOVE CONCRETE STAIRS.
9. REMOVE ASPHALT PAVING.
10. REMOVE CONCRETE CURBS.
11. REMOVE SEAWALL.
12. REMOVE CONCRETE BENCH.
13. BUILDING OVERHANG NOT SHOWN. PROTECT BUILDING FOUNDATION AND OVERHANG STRUCTURE DURING CONSTRUCTION.
14. PROTECT EXISTING PAVING.
15. REMOVE PAVING, STAIRS, RAILINGS AND WALLS IN THE PORTE COCHERE.
16. SIDEWALK AND CURB IN RIGHT-OF-WAY IN FRONT STREET IMPROVEMENT PACKAGE BY OTHERS (NIC).
17. REFERENCE NOTE NOT USED.
18. PROTECT EXISTING SIGN.
19. PROTECT EXISTING SEAWALL.
20. REFERENCE NOTE NOT USED.
21. SIGN TO BE RELOCATED.
22. REMOVE LIGHT POLE.
23. REMOVE STORM DRAIN INLET.
24. SALVAGE TILE ART ON WALLS.
25. REMOVE SEGMENT OF EXISTING FENCE - CONCRETE POST WITH CHAIN.
26. REMOVE SEGMENT OF EXISTING FENCE - WOOD POST METAL GUARDRAIL.
27. SALVAGE EXISTING CONTROL WIRES.
28. REFERENCE NOTE NOT USED.
29. PROTECT METAL GUARDRAIL (2 POSTS NORTH OF PROPOSED CURB).
30. PROTECT EXISTING FENCE - CONCRETE POST WITH CHAIN.
31. REMOVE SEGMENT OF EXISTING WALL, SEE STRUCTURAL FOR EXTENTS OF WALL DEMOLITION.
32. DEMO TO NEAREST EXISTING JOINT LINE.
33. VERIFY EXISTING UTILITIES WITH CIVIL.
34. DEMO INTERPRETIVE SIGNS (QTY 11). VERIFY QUANTITY IN THE FIELD.

X BID ALTERNATE LIST

2. BID ALTERNATE #2 - MEDIAN EXTENSION (ASPHALT REMOVAL AND SEEDED LAWN). SEE SHEET L4.00 MATERIALS NOTES AND LEGEND FOR BID ALT #1.

KEY MAP

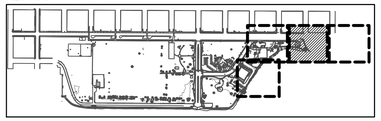

NORTH

SCALE: 1" = 20'-0"

0' 10' 20' 40'

GREEN WORKS
LANDSCAPE ARCHITECTURE
ENVIRONMENTAL DESIGN
110 SE Main St., Suite 100
Portland, OR 97214
Ph: 503 222 5612
Fax: 503 222 2283
Email: info@greenworkspc.com

LICENSED LANDSCAPE ARCHITECT
BENJAMIN JOHNSON 6183
Signature
Renewal Date
Date
STATE OF CALIFORNIA

VERIFY SCALE: DRAWINGS ARE TO SCALE IF BAR MEASURES 1"
0" 1/2" 1"

CITY OF CRESCENT CITY CALIFORNIA 1854

Project: Beachfront Park Clean CA
City of Crescent City
377 J STREET
CRESCENT CITY, CA, 95531
707-464-9506
ewier@crescentcity.org

Submittal: BID SET

Sheet Title: Demolition Plan

© GREENWORKS, P.C. 2024, ALL RIGHTS RESERVED
THESE DRAWINGS ARE THE PROPERTY OF GREENWORKS, P.C., AND ARE NOT TO BE USED OR REPRODUCED IN ANY MANNER, EXCEPT WITH THE PRIOR WRITTEN PERMISSION OF GREENWORKS, P.C.

Date:	05/09/2025
Revisions:	
Drawn By:	SS/MM/PG
Checked By:	BJ/GM
Job No.	220065
Approved:	BJ

L3.02

Sheet No. 16 of 63

G:\PROJECTS\220065_1_CRESCENT_CITY_BEACHFRONT_PARK\02_CLEAN_CA\02_PRODUCTION\01_CAD\01_PLOT_SHEETS\220065_DEMO_CCA.DWG

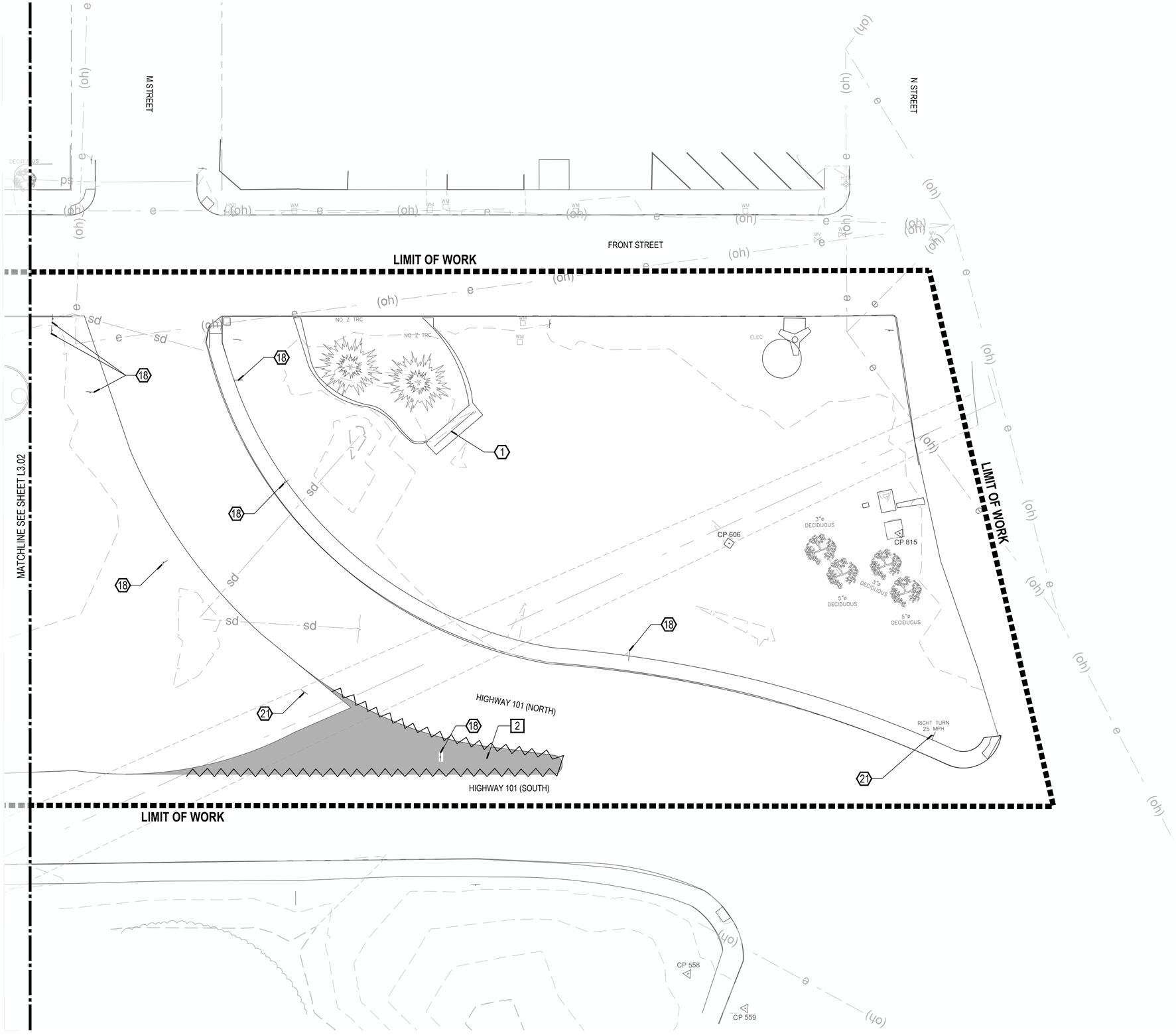

DEMOLITION LEGEND

SYMBOL	ITEM
	CLEAR AND GRUB LIMITS
	CONCRETE OR ASPHALT PAVING TO BE REMOVED
	CONCRETE WALLS & STEPS TO BE REMOVED
	CONCRETE CURBS TO BE REMOVED
	SAW CUT CONCRETE OR ASPHALT PAVING

GENERAL SITE DEMOLITION NOTES

1. ELEMENTS ON THE DRAWINGS SHOWN TO BE REMOVED SHALL BE REMOVED TO THEIR FULL DEPTHS OF THEIR CONSTRUCTION.
2. ITEMS THAT ARE ENCOUNTERED ON SITE (INCLUDING BELOW GRADE) THAT ARE NOT SHOWN ON THE DRAWINGS SHALL BE BROUGHT TO THE ATTENTION OF THE OWNER'S REPRESENTATIVE.
3. EROSION AND SEDIMENT CONTROL METHODS TO REMAIN IN PLACE DURING ALL CONSTRUCTION PHASES.
4. THE LOCATION OF EXISTING UTILITIES AS SHOWN ON THE DRAWINGS MAY VARY IN THE FIELD. ADDITIONAL UTILITIES MAY EXIST ON SITE BUT ARE NOT SHOWN ON THE DRAWINGS. VERIFY THE ACTUAL LOCATION OF ALL UTILITIES BEFORE ANY CONSTRUCTION ACTIVITIES COMMENCE. PRESERVE AND PROTECT EXISTING UTILITIES UNLESS OTHERWISE NOTED.
5. IT IS THE RESPONSIBILITY OF THE CONTRACTOR TO PROTECT THE CONSTRUCTION SITE AND THEIR EQUIPMENT.

SITE DEMOLITION REFERENCE NOTES

1. REMOVE EXISTING SIGN.
2. PROTECT EXISTING CONCRETE WALL/ COLUMNS.
3. REMOVE EXISTING CONCRETE WHEEL STOPS.
4. REMOVE EXISTING CONCRETE WALL AND RAILING.
5. REMOVE EXISTING CONCRETE RETAINING WALL.
6. REMOVE EXISTING HEDGES AND STUMPS.
7. SEE SHEET L2.00 FOR TREE PROTECTION AND REMOVAL NOTES.
8. REMOVE CONCRETE STAIRS.
9. REMOVE ASPHALT PAVING.
10. REMOVE CONCRETE CURBS.
11. REMOVE SEAWALL.
12. REMOVE CONCRETE BENCH.
13. BUILDING OVERHANG NOT SHOWN. PROTECT BUILDING FOUNDATION AND OVERHANG STRUCTURE DURING CONSTRUCTION.
14. PROTECT EXISTING PAVING.
15. REMOVE PAVING, STAIRS, RAILINGS AND WALLS IN THE PORTE COCHERE.
16. SIDEWALK AND CURB IN RIGHT-OF-WAY IN FRONT STREET IMPROVEMENT PACKAGE BY OTHERS (NIC).
17. REFERENCE NOTE NOT USED.
18. PROTECT EXISTING SIGN.
19. PROTECT EXISTING SEAWALL.
20. REFERENCE NOTE NOT USED.
21. SIGN TO BE RELOCATED.
22. REMOVE LIGHT POLE.
23. REMOVE STORM DRAIN INLET.
24. SALVAGE TILE ART ON WALLS.
25. REMOVE SEGMENT OF EXISTING FENCE - CONCRETE POST WITH CHAIN.
26. REMOVE SEGMENT OF EXISTING FENCE - WOOD POST METAL GUARDRAIL.
27. SALVAGE EXISTING CONTROL WIRES.
28. REFERENCE NOTE NOT USED.
29. PROTECT METAL GUARDRAIL (2 POSTS NORTH OF PROPOSED CURB).
30. PROTECT EXISTING FENCE - CONCRETE POST WITH CHAIN.
31. REMOVE SEGMENT OF EXISTING WALL, SEE STRUCTURAL FOR EXTENTS OF WALL DEMOLITION.
32. DEMO TO NEAREST EXISTING JOINT LINE.
33. VERIFY EXISTING UTILITIES WITH CIVIL.
34. DEMO INTERPRETIVE SIGNS (QTY 11). VERIFY QUANTITY IN THE FIELD.

X BID ALTERNATE LIST

2. BID ALTERNATE #2 - MEDIAN EXTENSION (ASPHALT REMOVAL AND SEEDED LAWN). SEE SHEET L4.00 MATERIALS NOTES AND LEGEND FOR BID ALT #1.

KEY MAP

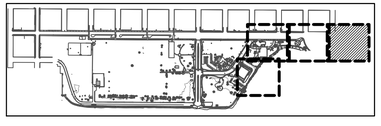

NORTH

SCALE: 1" = 20'-0"

0' 10' 20' 40'

GREEN WORKS
LANDSCAPE ARCHITECTURE
ENVIRONMENTAL DESIGN
110 SE Main St., Suite 100
Portland, OR 97214
Ph: 503 222 5612
Fax: 503 222 2283
Email: info@greenworkspc.com

LICENSED LANDSCAPE ARCHITECT
BENJAMIN JOHNSON 6183
Signature
Renewal Date
Date
STATE OF CALIFORNIA

VERIFY SCALE: DRAWINGS ARE TO SCALE IF BAR MEASURES 1"
0" 1/2" 1"

CITY OF CRESCENT CITY CALIFORNIA 1854

Project:
Beachfront Park Clean CA

City of Crescent City
377 J STREET
CRESCENT CITY, CA, 95531
707-464-9506
ewier@crescentcity.org

Submittal: BID SET

Sheet Title:
Demolition Plan

© GREENWORKS, P.C. 2024, ALL RIGHTS RESERVED

THESE DRAWINGS ARE THE PROPERTY OF GREENWORKS, P.C., AND ARE NOT TO BE USED OR REPRODUCED IN ANY MANNER, EXCEPT WITH THE PRIOR WRITTEN PERMISSION OF GREENWORKS, P.C.

Date:	05/09/2025
Revisions:	
Drawn By:	SS/MM/PG
Checked By:	BJ/GM
Job No.	220065
Approved:	BJ

L3.03

G:\PROJECTS\220065.1_CRESCENT_CITY_BEACHFRONT_PARK\02_CLEAN_CA\02_PRODUCTION\01_CAD\01_PLOT_SHEETS\220065_DEMO_CCA.DWG

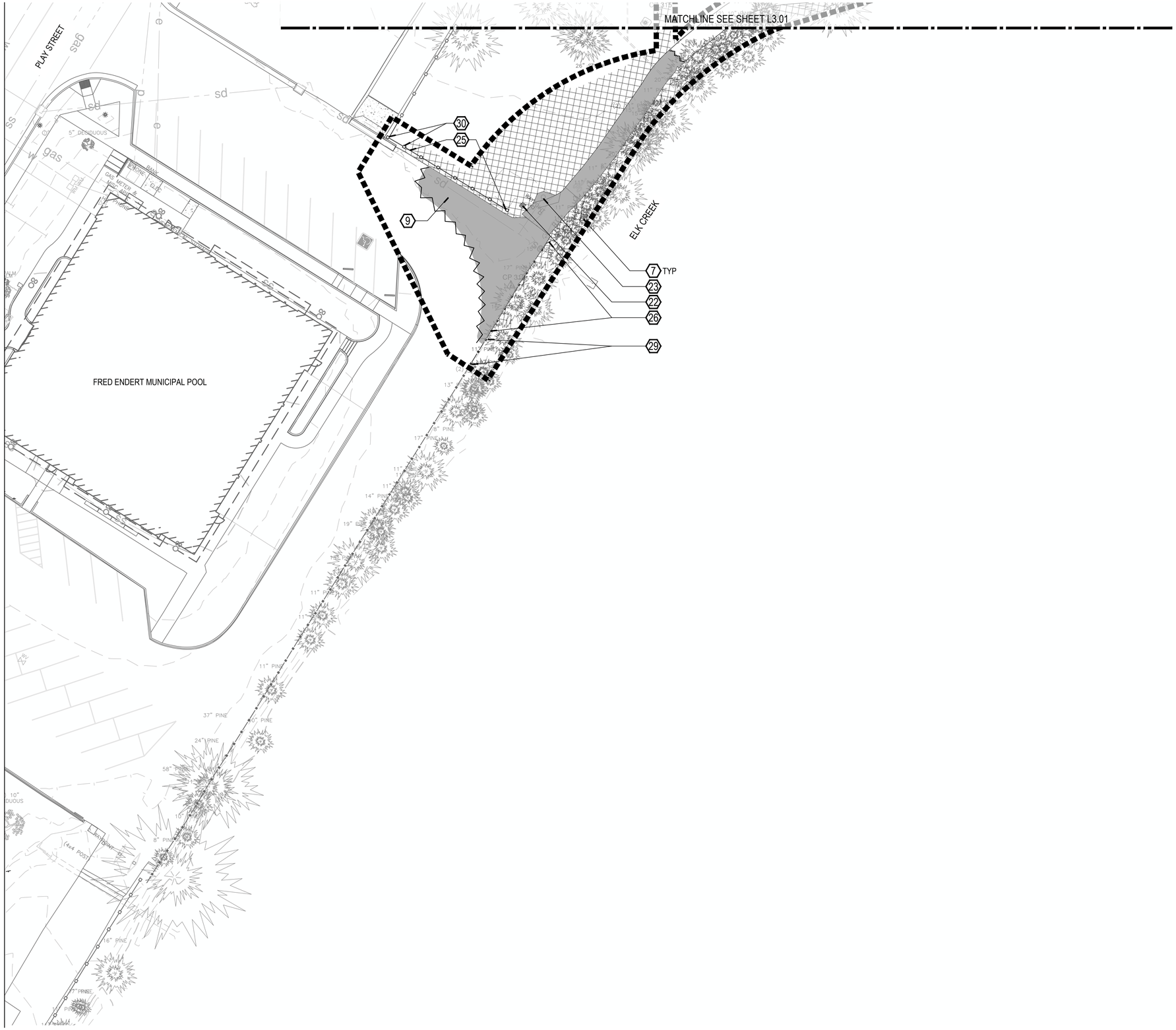

DEMOLITION LEGEND

SYMBOL	ITEM
	CLEAR AND GRUB LIMITS
	CONCRETE OR ASPHALT PAVING TO BE REMOVED
	CONCRETE WALLS & STEPS TO BE REMOVED
	CONCRETE CURBS TO BE REMOVED
	SAW CUT CONCRETE OR ASPHALT PAVING

GENERAL SITE DEMOLITION NOTES

1. ELEMENTS ON THE DRAWINGS SHOWN TO BE REMOVED SHALL BE REMOVED TO THEIR FULL DEPTHS OF THEIR CONSTRUCTION.
2. ITEMS THAT ARE ENCOUNTERED ON SITE (INCLUDING BELOW GRADE) THAT ARE NOT SHOWN ON THE DRAWINGS SHALL BE BROUGHT TO THE ATTENTION OF THE OWNER'S REPRESENTATIVE.
3. EROSION AND SEDIMENT CONTROL METHODS TO REMAIN IN PLACE DURING ALL CONSTRUCTION PHASES.
4. THE LOCATION OF EXISTING UTILITIES AS SHOWN ON THE DRAWINGS MAY VARY IN THE FIELD. ADDITIONAL UTILITIES MAY EXIST ON SITE BUT ARE NOT SHOWN ON THE DRAWINGS. VERIFY THE ACTUAL LOCATION OF ALL UTILITIES BEFORE ANY CONSTRUCTION ACTIVITIES COMMENCE. PRESERVE AND PROTECT EXISTING UTILITIES UNLESS OTHERWISE NOTED.
5. IT IS THE RESPONSIBILITY OF THE CONTRACTOR TO PROTECT THE CONSTRUCTION SITE AND THEIR EQUIPMENT.

SITE DEMOLITION REFERENCE NOTES

1. REMOVE EXISTING SIGN.
2. PROTECT EXISTING CONCRETE WALL/ COLUMNS.
3. REMOVE EXISTING CONCRETE WHEEL STOPS.
4. REMOVE EXISTING CONCRETE WALL AND RAILING.
5. REMOVE EXISTING CONCRETE RETAINING WALL.
6. REMOVE EXISTING HEDGES AND STUMPS.
7. SEE SHEET L2.00 FOR TREE PROTECTION AND REMOVAL NOTES.
8. REMOVE CONCRETE STAIRS.
9. REMOVE ASPHALT PAVING.
10. REMOVE CONCRETE CURBS.
11. REMOVE SEAWALL.
12. REMOVE CONCRETE BENCH.
13. BUILDING OVERHANG NOT SHOWN. PROTECT BUILDING FOUNDATION AND OVERHANG STRUCTURE DURING CONSTRUCTION.
14. PROTECT EXISTING PAVING.
15. REMOVE PAVING, STAIRS, RAILINGS AND WALLS IN THE PORTE COCHERE.
16. SIDEWALK AND CURB IN RIGHT-OF-WAY IN FRONT STREET IMPROVEMENT PACKAGE BY OTHERS (NIC).
17. REFERENCE NOTE NOT USED.
18. PROTECT EXISTING SIGN.
19. PROTECT EXISTING SEAWALL.
20. REFERENCE NOTE NOT USED.
21. SIGN TO BE RELOCATED.
22. REMOVE LIGHT POLE.
23. REMOVE STORM DRAIN INLET.
24. SALVAGE TILE ART ON WALLS.
25. REMOVE SEGMENT OF EXISTING FENCE - CONCRETE POST WITH CHAIN.
26. REMOVE SEGMENT OF EXISTING FENCE - WOOD POST METAL GUARDRAIL.
27. SALVAGE EXISTING CONTROL WIRES.
28. REFERENCE NOTE NOT USED.
29. PROTECT METAL GUARDRAIL (2 POSTS NORTH OF PROPOSED CURB).
30. PROTECT EXISTING FENCE - CONCRETE POST WITH CHAIN.
31. REMOVE SEGMENT OF EXISTING WALL, SEE STRUCTURAL FOR EXTENTS OF WALL DEMOLITION.
32. DEMO TO NEAREST EXISTING JOINT LINE.
33. VERIFY EXISTING UTILITIES WITH CIVIL.
34. DEMO INTERPRETIVE SIGNS (QTY 11). VERIFY QUANTITY IN THE FIELD.

X BID ALTERNATE LIST

2. BID ALTERNATE #2 - MEDIAN EXTENSION (ASPHALT REMOVAL AND SEEDED LAWN). SEE SHEET L4.00 MATERIALS NOTES AND LEGEND FOR BID ALT #1.

KEY MAP

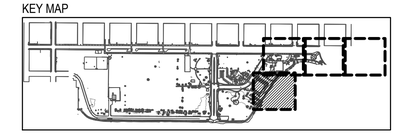

NORTH

SCALE: 1" = 20'-0"

0' 10' 20' 40'

GREEN WORKS
LANDSCAPE ARCHITECTURE
ENVIRONMENTAL DESIGN
110 SE Main St., Suite 100
Portland, OR 97214
Ph: 503 222 5612
Fax: 503 222 2283
Email: info@greenworkspc.com

LICENSED LANDSCAPE ARCHITECT
BENJAMIN JOHNSON #583
Signature
Renewal Date
Date
STATE OF CALIFORNIA

VERIFY SCALE: DRAWINGS ARE TO SCALE IF BAR MEASURES 1"
0" 1/2" 1"

CITY OF CRESCENT CITY CALIFORNIA 1854

Project:
Beachfront Park Clean CA

City of Crescent City
377 J STREET
CRESCENT CITY, CA, 95531
707-464-9506
ewier@crescentcity.org

Submittal: BID SET

Sheet Title:
Demolition Plan

© GREENWORKS, P.C. 2024, ALL RIGHTS RESERVED

THESE DRAWINGS ARE THE PROPERTY OF GREENWORKS, P.C., AND ARE NOT TO BE USED OR REPRODUCED IN ANY MANNER, EXCEPT WITH THE PRIOR WRITTEN PERMISSION OF GREENWORKS, P.C.

Date:	05/09/2025
Revisions:	
Drawn By:	SS/MM/PG
Checked By:	BJ/GM
Job No.	220065
Approved:	BJ

L3.04

Sheet No. 18 of 63

G:\PROJECTS\220065.1_CRESCENT_CITY_BEACHFRONT_PARK\02_CLEAN_CA\02_PRODUCTION\01_CAD\01_PLOT_SHEETS\220065_DEMO_CCA.DWG

DETAIL KEYNOTES

1.0 PAVING / SURFACING

NUMBER	ITEM	DETL / SHT	SPECS
1.1	CONCRETE PAVING - VEHICULAR	1/L9.01	321313
1.2	CONCRETE PAVING - PEDESTRIAN	2/L9.01	321313
1.3	DOWELED EXPANSION JOINT	3/L9.01	321313, 321373
1.4	CONTRACTION JOINT	4/L9.01	321313
1.5	ISOLATION JOINT	5/L9.01	321313, 321373
1.6	THICKENED EDGE - TYPE 1	6/L9.01	321313
1.7	DETAIL NOT USED	7/L9.01	
1.8	MONUMENT SIGN FOOTING	8/L9.01	033000
1.9	CONCRETE PAVING EDGE CONDITION	9/L9.01	033000
1.10	TYPICAL PAVING SQUARE OFF	1/L9.02	033000
1.11	PAVEMENT STRIPING	2/L9.02	321723

2.0 CURBS AND SPECIALTY SURFACING

NUMBER	ITEM	DETL / SHT	SPECS
2.1	SANDBLASTED STENCIL	3/L9.02	321316
2.2	LITHOMOSAIC PAVING EDGE CONDITION	4/L9.02	321316.15
2.3	TACTILE WARNING TILES	5/L9.02	321726
2.4	MOW CURB	6/9.02	033000
2.5	CONCRETE CURB - RAISED TYPE 1	7/9.02	033000
2.6	CONCRETE CURB - RAISED TYPE 2	1/9.03	033000
2.7	CONCRETE CURB TRANSITION	2/9.03	033000

3.0 WALLS, RAMPS AND STAIRS

NUMBER	ITEM	DETL / SHT	SPECS
3.1	CURB RAMP	3/9.03	033000
3.2	CONCRETE SEATWALL	4/L9.03	033000
3.3	CONCRETE WALL JOINTS / REVEALS	5/9.03	033000
3.4	CONCRETE STAIRS	1/L9.04	033000
3.5	HANDRAIL AT CONCRETE STAIRS	2/L9.04	055213
3.6	HANDRAIL END CONNECTION	6/L9.04	055213

4.0 SITE FURNISHINGS

NUMBER	ITEM	DETL / SHT	SPECS
4.1	BICYCLE RACK	1/L9.05	323300
4.2	RECESSED LIGHTING	2/L9.05	323300
4.3	ACCESSIBLE DRINKING FOUNTAIN	3/L9.05	323300
4.4	SKATE DETERRENT TYPE 1	4/L9.05	323300
4.5	SKATE DETERRENT TYPE 2	5/L9.05	323300
4.6	BOLLARD - TYPE 1	6/L9.05	323300
4.7	BOLLARD - TYPE 2 REMOVABLE	7/L9.05	323300

PAVING / SURFACING

SYMBOL	ITEM	REMARKS	SPEC NUMBER
	CONCRETE PAVING - VEHICULAR	BROOM FINISH.	033000
	CONCRETE PAVING - VEHICULAR	EXPOSED AGGREGATE FINISH.	033000
	CONCRETE PAVING - PEDESTRIAN	BROOM FINISH.	033000
	CONCRETE PAVING - PEDESTRIAN	EXPOSED AGGREGATE FINISH.	033000
	DOWELED EXPANSION JOINT	LOCATED AT TOP AND BOTTOM OF STAIRCASE.	321313, 321373
	CONTRACTION JOINT	GROOVED JOINT.	321313
	ISOLATION JOINT	ISOLATION JOINT WITH FILLER, BACKER ROD AND SAND-TEXTURE JOINT SEALER.	321313, 321373
	MONUMENT SIGN AND FOOTING (NTS)	SIGN OWNER FURNISHED CONTRACTOR INSTALLED - N.I.C. SYMBOL NTS.	033000
	PAVEMENT STRIPING	CONFIRM DETAIL MEETS CALTRANS STANDARDS.	321723

CURBS AND SPECIALTY SURFACING

SYMBOL	ITEM	REMARKS	SPEC NUMBER
	SANDBLASTED STENCIL	CONCRETE CURB TYPES. REFER TO DETAIL SHEETS AND CALLOUTS.	321316
	LITHOMOSAIC PAVING	TILE MOSAIC EMBEDDED IN LITHOCRETE - NOT IN CONTRACT. AGGREGATE BASE IS IN CONTRACT.	321316
	TACTILE WARNING TILES	LOCATED AT CURB RAMPS.	321726
	MOW CURB	LOCATED ALONG PLANT BED AT THE DISCOVERY CENTER ENTRY.	033000
	RAISED CURB	LOCATED AT THE DISCOVERY CENTER ENTRY SLOPED PATH, AND AT CURB RAMPS.	033000

WALL, RAMPS AND STAIRS

SYMBOL	ITEM	REMARKS	SPEC NUMBER
	CURB RAMP	WIDTH OF CURB RAMP VARIES, SEE PLANS.	033000
	CONCRETE SEATWALL	SIZE AND RADIUS OF WALLS VARIES. SEE PLANS AND DETAILS.	033000
	CONCRETE STAIRS	18" TREAD. SEE PLANS AND DETAILS FOR STAIR QUANTITY AND LOCATION.	033000
	HANDRAIL AT CONCRETE STAIRS		057300

GENERAL MATERIALS NOTES

1. PROVIDE EXPANSION JOINTS WHERE CONCRETE FLATWORK MEETS OTHER FLATWORK AND VERTICAL STRUCTURES SUCH AS WALLS, CURBS, STEPS, AND BUILDING ELEMENTS, ETC. UNLESS INDICATED OTHERWISE.
2. MATERIAL SYMBOLS ARE DIAGRAMMATIC IN NATURE AND NOT INTENDED TO BE TO SCALE. REFER TO LAYOUT AND DETAIL SHEETS FOR ACTUAL SIZES.
3. OWNER'S REPRESENTATIVE TO APPROVE OF ALL CONCRETE FORMWORK PRIOR TO PLACING CONCRETE.
4. ART AND INTERPRETIVE ELEMENTS SHOWN ARE SCHEMATIC AND NOT FOR CONSTRUCTION. FINAL SHOP DRAWINGS AND STRUCTURAL PLANS TO BE PROVIDED BY SELECTED FABRICATOR.

SITE FURNISHINGS

SYMBOL	ITEM	REMARKS	SPEC NUMBER
	BICYCLE RACK	EMBEDDED INTO CONCRETE PAVING.	323300
	RECESSED LIGHTING (NTS)	SYMBOL NTS.	265619
	ACCESSIBLE DRINKING FOUNTAIN	DRINKING FOUNTAIN WITH DOG WATER BOWL.	323300
	SKATE DETERRENT TYPE 1 (NTS)	INSTALLED ON CONCRETE WALLS. SYMBOL NTS.	323300
	SKATE DETERRENT TYPE 2 (NTS)	INSTALLED ON HANDRAILS. SYMBOL NTS.	323300
	BOLLARD - TYPE 1	STANDARD LIGHTED BOLLARD.	323300
	BOLLARD - TYPE 2 REMOVABLE	REMOVABLE BOLLARD TO ACCOMMODATE MAINTENANCE VEHICLES.	323300
	TRASH AND RECYCLING RECEPTACLES	OWNER FURNISHED CONTRACTOR INSTALLED - N.I.C. T = TRASH. R = RECYCLING.	323300
	PROPOSED SIGN (NTS)	LOCATED AT THE S CURVES. OWNER FURNISHED CONTRACTOR INSTALLED - N.I.C. SYMBOL NTS.	323300

INTERPRETIVE

SYMBOL	ITEM	REMARKS	SPEC NUMBER
	REDWOOD TREE INTERPRETIVE NODE	SCULPTURAL FEATURE PROVIDED AND INSTALLED BY OTHERS. SEE FX FOR REFERENCE, FINAL SHOP DRAWINGS TO BE PROVIDED BY SELECTED FABRICATOR.	323300
	BURDEN BASKET INTERPRETIVE NODE.	SCULPTURAL FEATURE PROVIDED AND INSTALLED BY OTHERS. SEE FX FOR REFERENCE, FINAL SHOP DRAWINGS TO BE PROVIDED BY SELECTED FABRICATOR.	323300
	TOLOWA WALK ENTRY EXHIBIT	SCULPTURAL FEATURE PROVIDED AND INSTALLED BY OTHERS. SEE FX FOR REFERENCE, FINAL SHOP DRAWINGS TO BE PROVIDED BY SELECTED FABRICATOR.	323300
	TRIP PLANNING SIGN (NTS)	SCULPTURAL FEATURE PROVIDED AND INSTALLED BY OTHERS. SEE FX FOR REFERENCE, FINAL SHOP DRAWINGS TO BE PROVIDED BY SELECTED FABRICATOR.	323300

X BID ALTERNATE LIST

1. BID ALTERNATE #1 - MEDIAN EXTENSION (ASPHALT REMOVAL AND SEEDED LAWN).

GREEN WORKS
LANDSCAPE ARCHITECTURE
ENVIRONMENTAL DESIGN
110 SE Main St., Suite 100
Portland, OR 97214
Ph: 503 222 5612
Fax: 503 222 2283
Email: info@greenworkspc.com

LICENSED LANDSCAPE ARCHITECT
BENJAMIN JOHNSON 6192
Signature
Renewal Date
Date
STATE OF CALIFORNIA

VERIFY SCALE: DRAWINGS ARE TO SCALE IF BAR MEASURES 1"
0" 1/2" 1"

CITY OF CRESCENT CITY CALIFORNIA 1854

Project:
Beachfront Park
Clean CA
City of Crescent City
377 J STREET
CRESCENT CITY, CA, 95531
707-464-9506
ewier@crescentcity.org

Submittal: BID SET

Sheet Title:
Materials Notes And Legend

© GREENWORKS, P.C. 2024, ALL RIGHTS RESERVED
THESE DRAWINGS ARE THE PROPERTY OF GREENWORKS, P.C., AND ARE NOT TO BE USED OR REPRODUCED IN ANY MANNER, EXCEPT WITH THE PRIOR WRITTEN PERMISSION OF GREENWORKS, P.C.

Date:	05/09/2025
Revisions:	
Drawn By:	SS/MM/PG
Checked By:	BJ/GM
Job No.	220065
Approved:	BJ

L4.00

Sheet No. 19 of 63

G:\PROJECTS\220065.1_CRESCENT_CITY_BEACHFRONT_PARK\02_CLEAN_CA\02_PRODUCTION\01_CAD\01_PLOT_SHEETS\220065_MATL_CCA.DWG

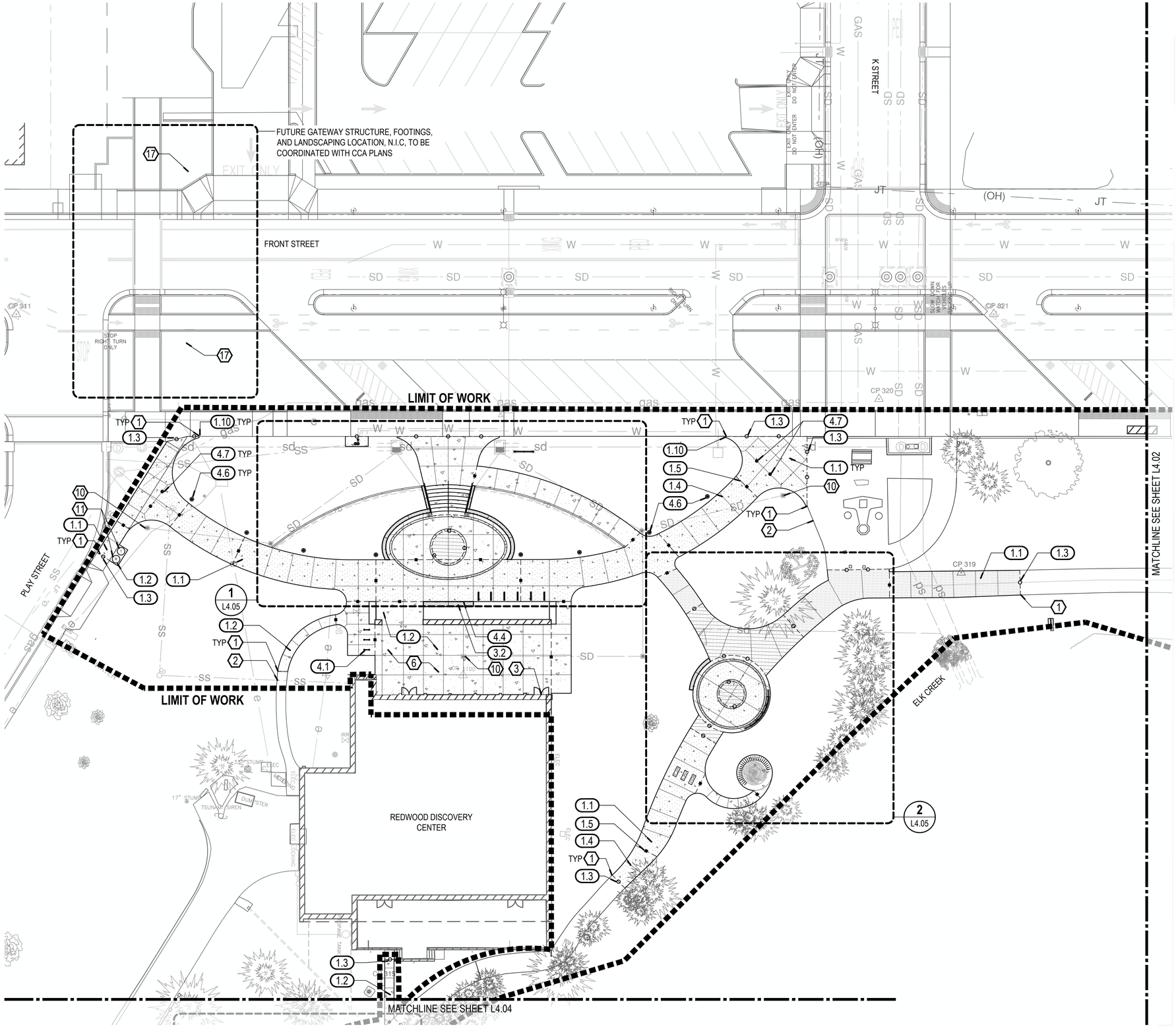

MATERIALS LEGEND

SYMBOL	ITEM
	CONCRETE PAVING - VEHICULAR (BROOM FINISH)
	CONCRETE PAVING - VEHICULAR (EXPOSED AGGREGATE FINISH)
	CONCRETE PAVING - PEDESTRIAN (BROOM FINISH)
	CONCRETE PAVING - PEDESTRIAN (EXPOSED AGGREGATE FINISH)
	LITHOMOSAIC PAVING - N.I.C
	CONCRETE WALL
	TACTILE WARNING
STANDARD REMOVABLE	BOLLARDS (STANDARD AND REMOVABLE)
	DOWELED EXPANSION JOINT (AT STEPS, WALLS, LITHOCRETE, AND NEW PAVING MEET EXISTING PAVING)
	CONTRACTION JOINT
	ISOLATION JOINT (SEPARATE POURS)

MATERIALS KEY NOTES

1. EDGE OF PROPOSED PAVING. VERIFY EXISTING PAVING EDGE.
2. EXISTING CONCRETE PAVING.
3. PROPOSED PAVING TO MATCH FFE OF BUILDING.
4. TRIP PLANNING SIGNS - SEE SHEET F8 FOR INFORMATION ON INSTALL. SIGN STRUCTURE IS IN CONTRACT, PANELS AND CONTENT ARE N.I.C. LOCATION AND ALIGNMENT TO BE APPROVED BY LANDSCAPE ARCHITECT.
5. SEE DETAILS FOR JOINT TYPES AT STAIRS AND WALLS.
6. FIELD VERIFY EXISTING CONDITIONS IN PORTE COCHERE.
7. REDWOOD TREE INTERPRETIVE NODE. SCULPTURAL FEATURES PROVIDED AND INSTALLED BY OTHERS. CONTRACTOR TO PROVIDE FOUNDATION AGGREGATE AND CONCRETE. SEE F4-F5 FOR REFERENCE, FINAL SHOP DRAWINGS TO BE PROVIDED BY SELECTED FABRICATOR. COORDINATE INSTALLATION WITH INTERPRETIVE SIGN BUILDERS.
8. BURDEN BASKET INTERPRETIVE NODE. SCULPTURAL FEATURES PROVIDED AND INSTALLED BY OTHERS. CONTRACTOR TO PROVIDE FOUNDATION AGGREGATE AND CONCRETE. SEE F1-F3 FOR REFERENCE, FINAL SHOP DRAWINGS TO BE PROVIDED BY SELECTED FABRICATOR. COORDINATE INSTALLATION WITH INTERPRETIVE SIGN BUILDERS.
9. TOLOWA WALK ENTRY EXHIBIT BY OTHERS - N.I.C. ALUMINUM BLADES TO BE ALIGNED ON CENTERLINE OF STANDARD VEHICULAR CONCRETE BAND. LOCATION AND ALIGNMENT TO BE APPROVED BY LANDSCAPE ARCHITECT. COORDINATE INSTALLATION WITH INTERPRETIVE SIGN BUILDERS.
10. SEE CIVIL FOR PROPOSED DRAINAGE FEATURES.
11. TRASH / RECYCLING OWNER FURNISHED CONTRACTOR INSTALLED - N.I.C.
12. MONUMENT SIGN OWNER FURNISHED CONTRACTOR INSTALLED - N.I.C.
13. RELOCATED RIGHT TURN 25MPH SIGN.
14. PROPOSED NEW DIRECTIONAL SIGN.
15. TOURIST INFORMATION DIRECTIONAL SIGN.
16. RELOCATED RIGHT TURN 25MPH SIGN.
17. APPROXIMATE GATEWAY FOOTING LOCATION - GATEWAY AND GATEWAY FOOTINGS, N.I.C, TO BE COORDINATED WITH CCA PLANS.
18. LITHOCRETE WITH LITHOMOSAIC - N.I.C., AGGREGATE BASE IS IN CONTRACT. FINAL JOINTING PATTERN OF LITHOCRETE TO BE SUBMITTED BY CONTRACTOR TO BE APPROVED BY LANDSCAPE ARCHITECT.

KEY MAP

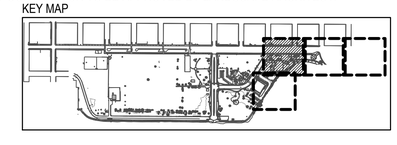

NORTH

SCALE: 1" = 20'-0"

0' 10' 20' 40'

GREEN WORKS
LANDSCAPE ARCHITECTURE
ENVIRONMENTAL DESIGN
110 SE Main St., Suite 100
Portland, OR 97214
Ph: 503 222 5612
Fax: 503 222 2283
Email: info@greenworkspc.com

LICENSED LANDSCAPE ARCHITECT
BENJAMIN JOHNSON 6183
Signature
Renewal Date
Date
STATE OF CALIFORNIA

VERIFY SCALE: DRAWINGS ARE TO SCALE IF BAR MEASURES 1"
0" 1/2" 1"

CITY OF CRESCENT CITY CALIFORNIA 1854

Project: Beachfront Park Clean CA
City of Crescent City
377 J STREET
CRESCENT CITY, CA, 95531
707-464-9506
ewier@crescentcity.org

Submittal: BID SET

Sheet Title: Materials Plan

© GREENWORKS, P.C. 2024, ALL RIGHTS RESERVED
THESE DRAWINGS ARE THE PROPERTY OF GREENWORKS, P.C., AND ARE NOT TO BE USED OR REPRODUCED IN ANY MANNER, EXCEPT WITH THE PRIOR WRITTEN PERMISSION OF GREENWORKS, P.C.

Date:	05/09/2025
Revisions:	
Drawn By:	SS/MM/PG
Checked By:	BJ/GM
Job No.	220065
Approved:	BJ

L4.01

Sheet No. 20 of 63

G:\PROJECTS\220065 | CRESCENT CITY_BEACHFRONT_PARK\02_CLEAN_CA\02_PRODUCTION\01_CAD\01_PLOT_SHEETS\220065_MATL_CCA.DWG

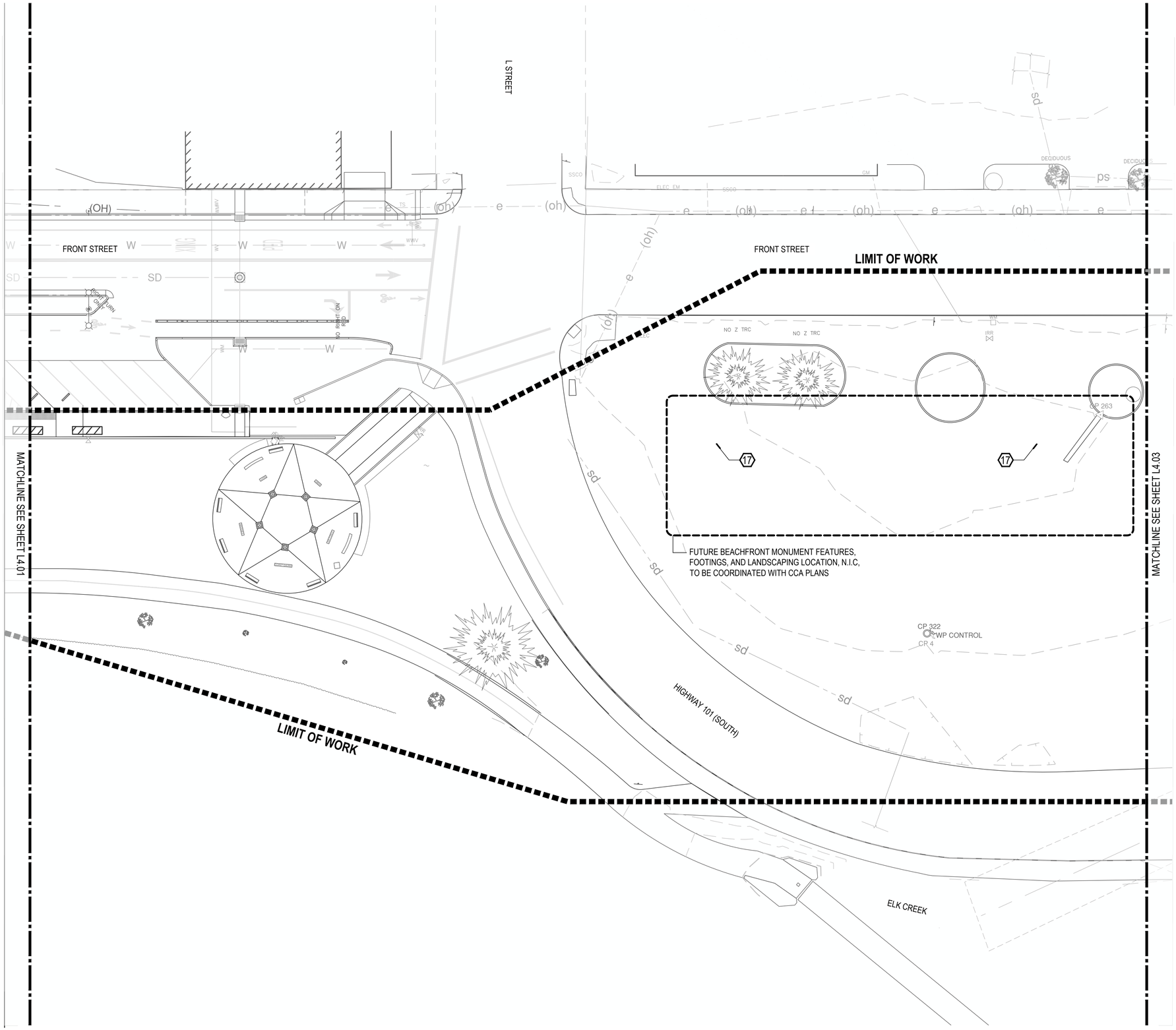

MATERIALS LEGEND

SYMBOL	ITEM
	CONCRETE PAVING - VEHICULAR (BROOM FINISH)
	CONCRETE PAVING - VEHICULAR (EXPOSED AGGREGATE FINISH)
	CONCRETE PAVING - PEDESTRIAN (BROOM FINISH)
	CONCRETE PAVING - PEDESTRIAN (EXPOSED AGGREGATE FINISH)
	LITHOMOSAIC PAVING - N.I.C
	CONCRETE WALL
	TACTILE WARNING
STANDARD / REMOVABLE	BOLLARDS (STANDARD AND REMOVABLE)
	DOWELED EXPANSION JOINT (AT STEPS, WALLS, LITHOCRETE, AND NEW PAVING MEET EXISTING PAVING)
	CONTRACTION JOINT
	ISOLATION JOINT (SEPARATE POURS)

MATERIALS KEY NOTES

1. EDGE OF PROPOSED PAVING. VERIFY EXISTING PAVING EDGE.
2. EXISTING CONCRETE PAVING.
3. PROPOSED PAVING TO MATCH FFE OF BUILDING.
4. TRIP PLANNING SIGNS - SEE SHEET F8 FOR INFORMATION ON INSTALL. SIGN STRUCTURE IS IN CONTRACT, PANELS AND CONTENT ARE N.I.C. LOCATION AND ALIGNMENT TO BE APPROVED BY LANDSCAPE ARCHITECT.
5. SEE DETAILS FOR JOINT TYPES AT STAIRS AND WALLS.
6. FIELD VERIFY EXISTING CONDITIONS IN PORTE COCHERE.
7. REDWOOD TREE INTERPRETIVE NODE. SCULPTURAL FEATURES PROVIDED AND INSTALLED BY OTHERS. CONTRACTOR TO PROVIDE FOUNDATION AGGREGATE AND CONCRETE. SEE F4-F5 FOR REFERENCE, FINAL SHOP DRAWINGS TO BE PROVIDED BY SELECTED FABRICATOR. COORDINATE INSTALLATION WITH INTERPRETIVE SIGN BUILDERS.
8. BURDEN BASKET INTERPRETIVE NODE. SCULPTURAL FEATURES PROVIDED AND INSTALLED BY OTHERS. CONTRACTOR TO PROVIDE FOUNDATION AGGREGATE AND CONCRETE. SEE F1-F3 FOR REFERENCE, FINAL SHOP DRAWINGS TO BE PROVIDED BY SELECTED FABRICATOR. COORDINATE INSTALLATION WITH INTERPRETIVE SIGN BUILDERS.
9. TOLOWA WALK ENTRY EXHIBIT BY OTHERS - N.I.C. ALUMINUM BLADES TO BE ALIGNED ON CENTERLINE OF STANDARD VEHICULAR CONCRETE BAND. LOCATION AND ALIGNMENT TO BE APPROVED BY LANDSCAPE ARCHITECT. COORDINATE INSTALLATION WITH INTERPRETIVE SIGN BUILDERS.
10. SEE CIVIL FOR PROPOSED DRAINAGE FEATURES.
11. TRASH / RECYCLING OWNER FURNISHED CONTRACTOR INSTALLED - N.I.C.
12. MONUMENT SIGN OWNER FURNISHED CONTRACTOR INSTALLED - N.I.C.
13. RELOCATED RIGHT TURN 25MPH SIGN.
14. PROPOSED NEW DIRECTIONAL SIGN.
15. TOURIST INFORMATION DIRECTIONAL SIGN.
16. RELOCATED RIGHT TURN 25MPH SIGN.
17. APPROXIMATE GATEWAY FOOTING LOCATION - GATEWAY AND GATEWAY FOOTINGS, N.I.C, TO BE COORDINATED WITH CCA PLANS.
18. LITHOCRETE WITH LITHOMOSAIC - N.I.C., AGGREGATE BASE IS IN CONTRACT. FINAL JOINTING PATTERN OF LITHOCRETE TO BE SUBMITTED BY CONTRACTOR TO BE APPROVED BY LANDSCAPE ARCHITECT.

KEY MAP

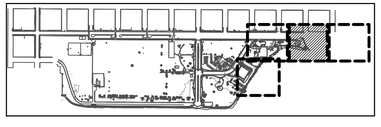

NORTH

SCALE: 1" = 20'-0"

0' 10' 20' 40'

GREEN WORKS
LANDSCAPE ARCHITECTURE
ENVIRONMENTAL DESIGN
110 SE Main St., Suite 100
Portland, OR 97214
Ph: 503 222 5612
Fax: 503 222 2283
Email: info@greenworkspc.com

LICENSED LANDSCAPE ARCHITECT
BENJAMIN JOHNSON 6162
Signature
Renewal Date
Date
STATE OF CALIFORNIA

VERIFY SCALE: DRAWINGS ARE TO SCALE IF BAR MEASURES 1"
0" 1/2" 1"

CITY OF CRESCENT CITY CALIFORNIA 1854

Project: Beachfront Park
Clean CA
City of Crescent City
377 J STREET
CRESCENT CITY, CA, 95531
707-464-9506
ewier@crescentcity.org

Submittal: BID SET

Sheet Title: Materials Plan

© GREENWORKS, P.C.
2024, ALL RIGHTS RESERVED

THESE DRAWINGS ARE THE PROPERTY OF GREENWORKS, P.C., AND ARE NOT TO BE USED OR REPRODUCED IN ANY MANNER, EXCEPT WITH THE PRIOR WRITTEN PERMISSION OF GREENWORKS, P.C.

Date:	05/09/2025
Revisions:	
Drawn By:	SS/MM/PG
Checked By:	BJ/GM
Job No.	220065
Approved:	BJ

L4.02

Sheet No. 21 of 63

G:\PROJECTS\220065-1_CRESCENT_CITY_BEACHFRONT_PARK\02_CLEAN_CA\02_PRODUCTION\01_CAD\01_PLOT_SHEETS\220065_MATL_CCA.DWG

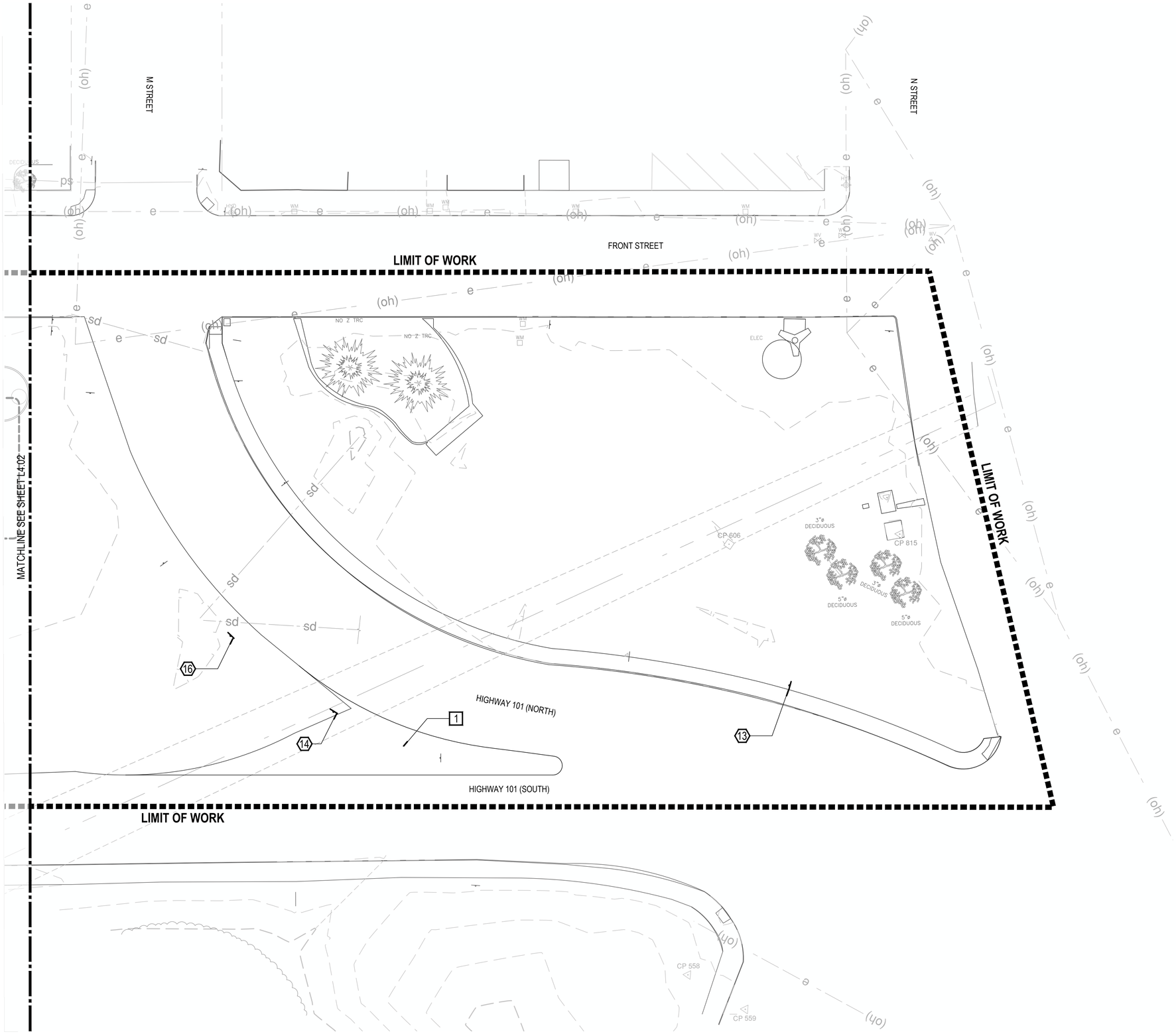

MATERIALS LEGEND

SYMBOL	ITEM
	CONCRETE PAVING - VEHICULAR (BROOM FINISH)
	CONCRETE PAVING - VEHICULAR (EXPOSED AGGREGATE FINISH)
	CONCRETE PAVING - PEDESTRIAN (BROOM FINISH)
	CONCRETE PAVING - PEDESTRIAN (EXPOSED AGGREGATE FINISH)
	LITHOMOSAIC PAVING - N.I.C
	CONCRETE WALL
	TACTILE WARNING
STANDARD / REMOVABLE	BOLLARDS (STANDARD AND REMOVABLE)
	DOWELED EXPANSION JOINT (AT STEPS, WALLS, LITHOCRETE, AND NEW PAVING MEET EXISTING PAVING)
	CONTRACTION JOINT
	ISOLATION JOINT (SEPARATE POURS)

MATERIALS KEY NOTES

1. EDGE OF PROPOSED PAVING. VERIFY EXISTING PAVING EDGE.
2. EXISTING CONCRETE PAVING.
3. PROPOSED PAVING TO MATCH FFE OF BUILDING.
4. TRIP PLANNING SIGNS - SEE SHEET F8 FOR INFORMATION ON INSTALL. SIGN STRUCTURE IS IN CONTRACT, PANELS AND CONTENT ARE N.I.C. LOCATION AND ALIGNMENT TO BE APPROVED BY LANDSCAPE ARCHITECT.
5. SEE DETAILS FOR JOINT TYPES AT STAIRS AND WALLS.
6. FIELD VERIFY EXISTING CONDITIONS IN PORTE COCHERE.
7. REDWOOD TREE INTERPRETIVE NODE. SCULPTURAL FEATURES PROVIDED AND INSTALLED BY OTHERS. CONTRACTOR TO PROVIDE FOUNDATION AGGREGATE AND CONCRETE. SEE F4-F5 FOR REFERENCE, FINAL SHOP DRAWINGS TO BE PROVIDED BY SELECTED FABRICATOR. COORDINATE INSTALLATION WITH INTERPRETIVE SIGN BUILDERS.
8. BURDEN BASKET INTERPRETIVE NODE. SCULPTURAL FEATURES PROVIDED AND INSTALLED BY OTHERS. CONTRACTOR TO PROVIDE FOUNDATION AGGREGATE AND CONCRETE. SEE F1-F3 FOR REFERENCE, FINAL SHOP DRAWINGS TO BE PROVIDED BY SELECTED FABRICATOR. COORDINATE INSTALLATION WITH INTERPRETIVE SIGN BUILDERS.
9. TOLOWA WALK ENTRY EXHIBIT BY OTHERS - N.I.C. ALUMINUM BLADES TO BE ALIGNED ON CENTERLINE OF STANDARD VEHICULAR CONCRETE BAND. LOCATION AND ALIGNMENT TO BE APPROVED BY LANDSCAPE ARCHITECT. COORDINATE INSTALLATION WITH INTERPRETIVE SIGN BUILDERS.
10. SEE CIVIL FOR PROPOSED DRAINAGE FEATURES.
11. TRASH / RECYCLING OWNER FURNISHED CONTRACTOR INSTALLED - N.I.C.
12. MONUMENT SIGN OWNER FURNISHED CONTRACTOR INSTALLED - N.I.C.
13. RELOCATED RIGHT TURN 25MPH SIGN.
14. PROPOSED NEW DIRECTIONAL SIGN.
15. TOURIST INFORMATION DIRECTIONAL SIGN.
16. RELOCATED RIGHT TURN 25MPH SIGN.
17. APPROXIMATE GATEWAY FOOTING LOCATION - GATEWAY AND GATEWAY FOOTINGS, N.I.C, TO BE COORDINATED WITH CCA PLANS.
18. LITHOCRETE WITH LITHOMOSAIC - N.I.C., AGGREGATE BASE IS IN CONTRACT. FINAL JOINTING PATTERN OF LITHOCRETE TO BE SUBMITTED BY CONTRACTOR TO BE APPROVED BY LANDSCAPE ARCHITECT.

KEY MAP

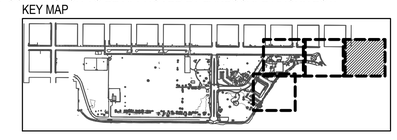

NORTH

SCALE: 1" = 20'-0"

0' 10' 20' 40'

GREEN WORKS
LANDSCAPE ARCHITECTURE
ENVIRONMENTAL DESIGN
110 SE Main St., Suite 100
Portland, OR 97214
Ph: 503 222 5612
Fax: 503 222 2283
Email: info@greenworkspc.com

LICENSED LANDSCAPE ARCHITECT
BENJAMIN JOHNSON 6183
Signature
Renewal Date
Date
STATE OF CALIFORNIA

VERIFY SCALE: DRAWINGS ARE TO SCALE IF BAR MEASURES 1"
0" 1/2" 1"

CITY OF CRESCENT CITY CALIFORNIA 1854

Project: Beachfront Park Clean CA
City of Crescent City
377 J STREET
CRESCENT CITY, CA, 95531
707-464-9506
ewier@crescentcity.org

Submittal: BID SET

Sheet Title: Materials Plan

© GREENWORKS, P.C. 2024, ALL RIGHTS RESERVED
THESE DRAWINGS ARE THE PROPERTY OF GREENWORKS, P.C., AND ARE NOT TO BE USED OR REPRODUCED IN ANY MANNER, EXCEPT WITH THE PRIOR WRITTEN PERMISSION OF GREENWORKS, P.C.

Date:	05/09/2025
Revisions:	
Drawn By:	SS/MM/PG
Checked By:	BJ/GM
Job No.	220065
Approved:	BJ

L4.03

Sheet No. 22 of 63

G:\PROJECTS\220065.1_CRESCENT_CITY_BEACHFRONT_PARK\02_CLEAN_CA\02_PRODUCTION\01_CAD\01_PLOT_SHEETS\220065_MATL_CCA.DWG

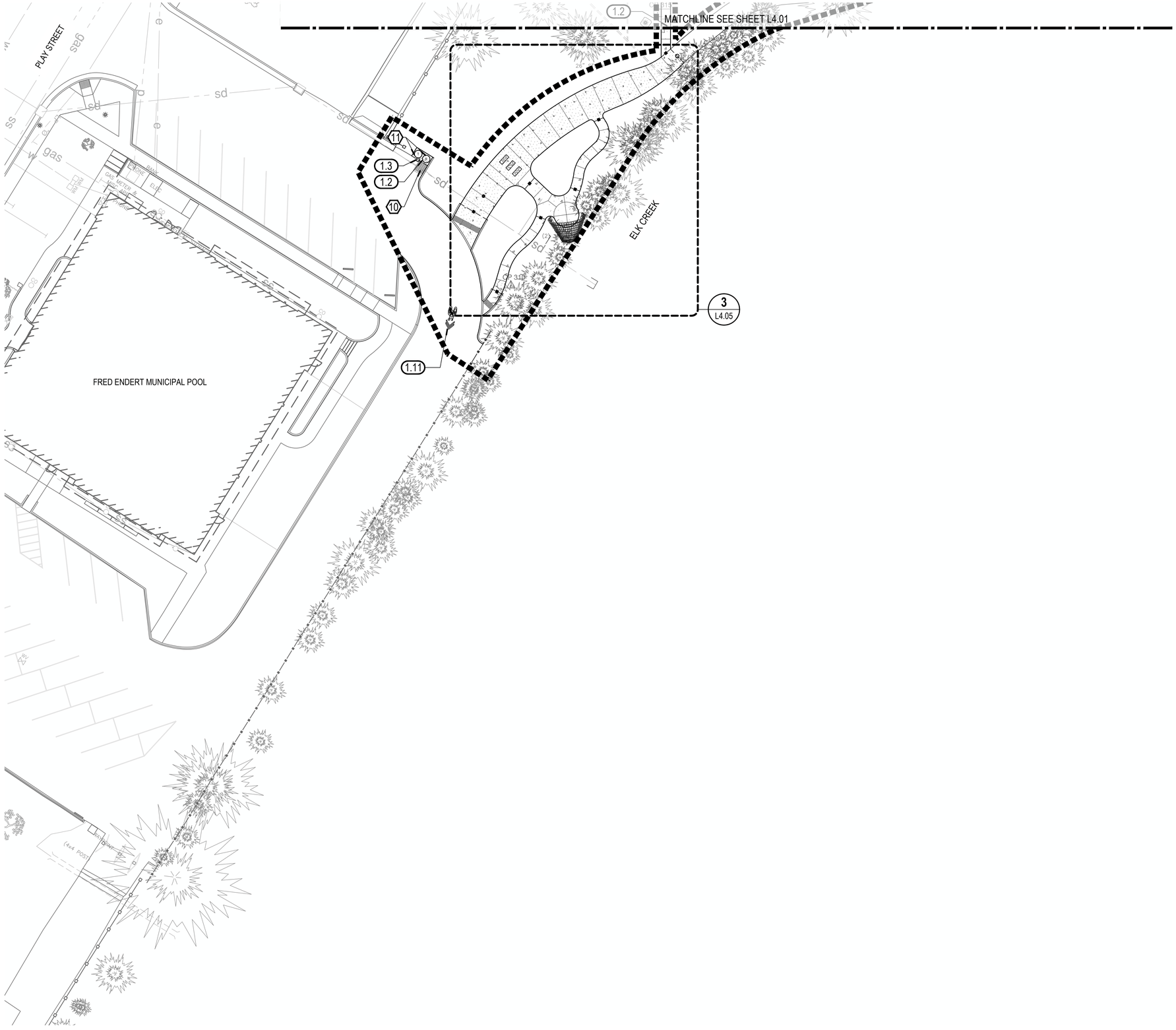

MATERIALS LEGEND

SYMBOL	ITEM
	CONCRETE PAVING - VEHICULAR (BROOM FINISH)
	CONCRETE PAVING - VEHICULAR (EXPOSED AGGREGATE FINISH)
	CONCRETE PAVING - PEDESTRIAN (BROOM FINISH)
	CONCRETE PAVING - PEDESTRIAN (EXPOSED AGGREGATE FINISH)
	LITHOMOSAIC PAVING - N.I.C
	CONCRETE WALL
	TACTILE WARNING
STANDARD REMOVABLE	BOLLARDS (STANDARD AND REMOVABLE)
	DOWELED EXPANSION JOINT (AT STEPS, WALLS, LITHOCRETE, AND NEW PAVING MEET EXISTING PAVING)
	CONTRACTION JOINT
	ISOLATION JOINT (SEPARATE POURS)

MATERIALS KEY NOTES

1. EDGE OF PROPOSED PAVING. VERIFY EXISTING PAVING EDGE.
2. EXISTING CONCRETE PAVING.
3. PROPOSED PAVING TO MATCH FFE OF BUILDING.
4. TRIP PLANNING SIGNS - SEE SHEET F8 FOR INFORMATION ON INSTALL. SIGN STRUCTURE IS IN CONTRACT, PANELS AND CONTENT ARE N.I.C. LOCATION AND ALIGNMENT TO BE APPROVED BY LANDSCAPE ARCHITECT.
5. SEE DETAILS FOR JOINT TYPES AT STAIRS AND WALLS.
6. FIELD VERIFY EXISTING CONDITIONS IN PORTE COCHERE.
7. REDWOOD TREE INTERPRETIVE NODE. SCULPTURAL FEATURES PROVIDED AND INSTALLED BY OTHERS. CONTRACTOR TO PROVIDE FOUNDATION AGGREGATE AND CONCRETE. SEE F4-F5 FOR REFERENCE, FINAL SHOP DRAWINGS TO BE PROVIDED BY SELECTED FABRICATOR. COORDINATE INSTALLATION WITH INTERPRETIVE SIGN BUILDERS.
8. BURDEN BASKET INTERPRETIVE NODE. SCULPTURAL FEATURES PROVIDED AND INSTALLED BY OTHERS. CONTRACTOR TO PROVIDE FOUNDATION AGGREGATE AND CONCRETE. SEE F1-F3 FOR REFERENCE, FINAL SHOP DRAWINGS TO BE PROVIDED BY SELECTED FABRICATOR. COORDINATE INSTALLATION WITH INTERPRETIVE SIGN BUILDERS.
9. TOLOWA WALK ENTRY EXHIBIT BY OTHERS - N.I.C. ALUMINUM BLADES TO BE ALIGNED ON CENTERLINE OF STANDARD VEHICULAR CONCRETE BAND. LOCATION AND ALIGNMENT TO BE APPROVED BY LANDSCAPE ARCHITECT. COORDINATE INSTALLATION WITH INTERPRETIVE SIGN BUILDERS.
10. SEE CIVIL FOR PROPOSED DRAINAGE FEATURES.
11. TRASH / RECYCLING OWNER FURNISHED CONTRACTOR INSTALLED - N.I.C.
12. MONUMENT SIGN OWNER FURNISHED CONTRACTOR INSTALLED - N.I.C.
13. RELOCATED RIGHT TURN 25MPH SIGN.
14. PROPOSED NEW DIRECTIONAL SIGN.
15. TOURIST INFORMATION DIRECTIONAL SIGN.
16. RELOCATED RIGHT TURN 25MPH SIGN.
17. APPROXIMATE GATEWAY FOOTING LOCATION - GATEWAY AND GATEWAY FOOTINGS, N.I.C, TO BE COORDINATED WITH CCA PLANS.
18. LITHOCRETE WITH LITHOMOSAIC - N.I.C., AGGREGATE BASE IS IN CONTRACT. FINAL JOINTING PATTERN OF LITHOCRETE TO BE SUBMITTED BY CONTRACTOR TO BE APPROVED BY LANDSCAPE ARCHITECT.

KEY MAP

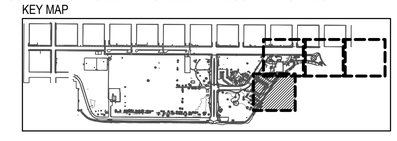

NORTH

SCALE: 1" = 20'-0"

0' 10' 20' 40'

GREEN WORKS
LANDSCAPE ARCHITECTURE
ENVIRONMENTAL DESIGN
110 SE Main St., Suite 100
Portland, OR 97214
Ph: 503 222 5612
Fax: 503 222 2283
Email: info@greenworkspc.com

LICENSED LANDSCAPE ARCHITECT
BENJAMIN JOHNSON 6183
Signature
Renewal Date
Date
STATE OF CALIFORNIA

VERIFY SCALE: DRAWINGS ARE TO SCALE IF BAR MEASURES 1"
0" 1/2" 1"

CITY OF CRESCENT CITY CALIFORNIA 1854

Project:
Beachfront Park Clean CA

City of Crescent City
377 J STREET
CRESCENT CITY, CA, 95531
707-464-9506
ewier@crescentcity.org

Submittal: BID SET

Sheet Title:
Materials Plan

© GREENWORKS, P.C.
2024, ALL RIGHTS RESERVED

THESE DRAWINGS ARE THE PROPERTY OF GREENWORKS, P.C., AND ARE NOT TO BE USED OR REPRODUCED IN ANY MANNER, EXCEPT WITH THE PRIOR WRITTEN PERMISSION OF GREENWORKS, P.C.

Date:	05/09/2025
Revisions:	
Drawn By:	SS/MM/PG
Checked By:	BJ/GM
Job No.	220065
Approved:	BJ

L4.04

Sheet No. 23 of 63

G:\PROJECTS\220065.1_CRESCENT_CITY_BEACHFRONT_PARK\02_CLEAN_CA\02_PRODUCTION\01_CAD\01_PLOT_SHEETS\220065_MATL_CCA.DWG

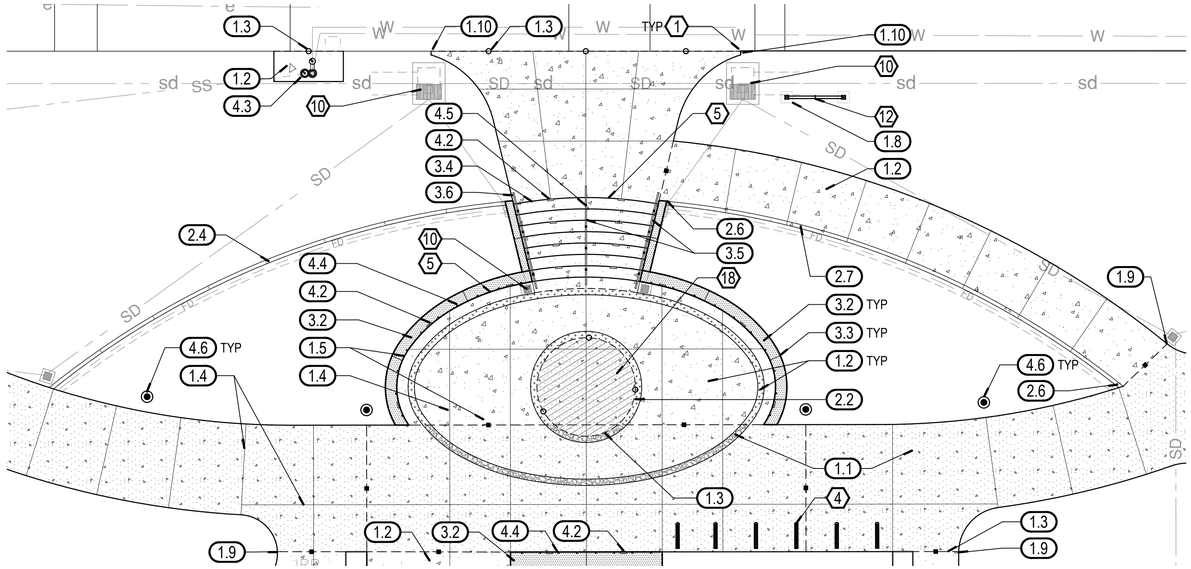

1 DISCOVERY CENTER ENTRY

SCALE: 1" = 10'-0"

0' 5' 10' 20' NORTH

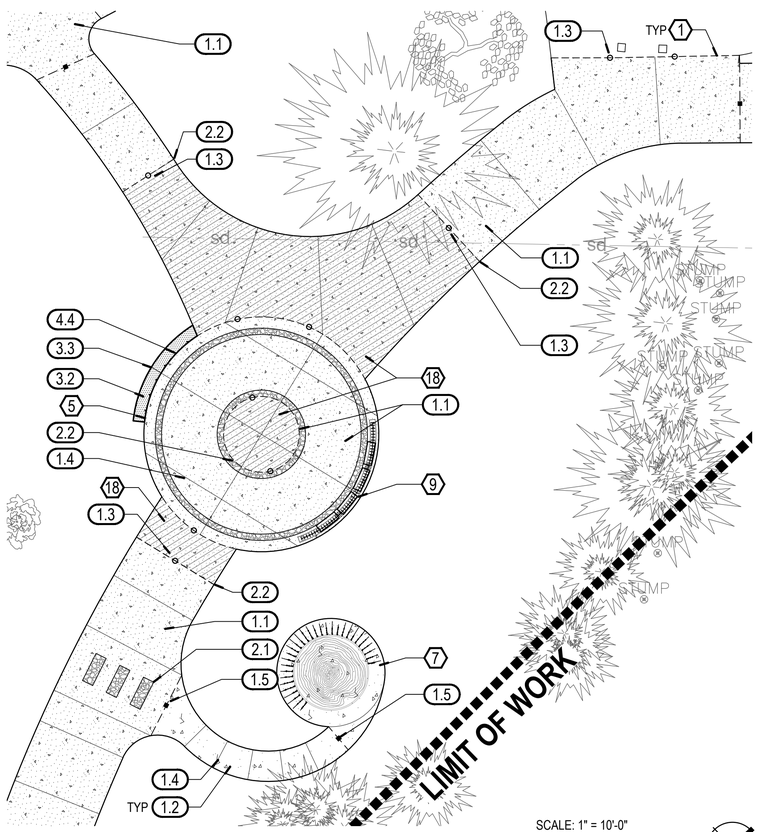

2 TOLOWA WALK ENTRY

SCALE: 1" = 10'-0"

0' 5' 10' 20' NORTH

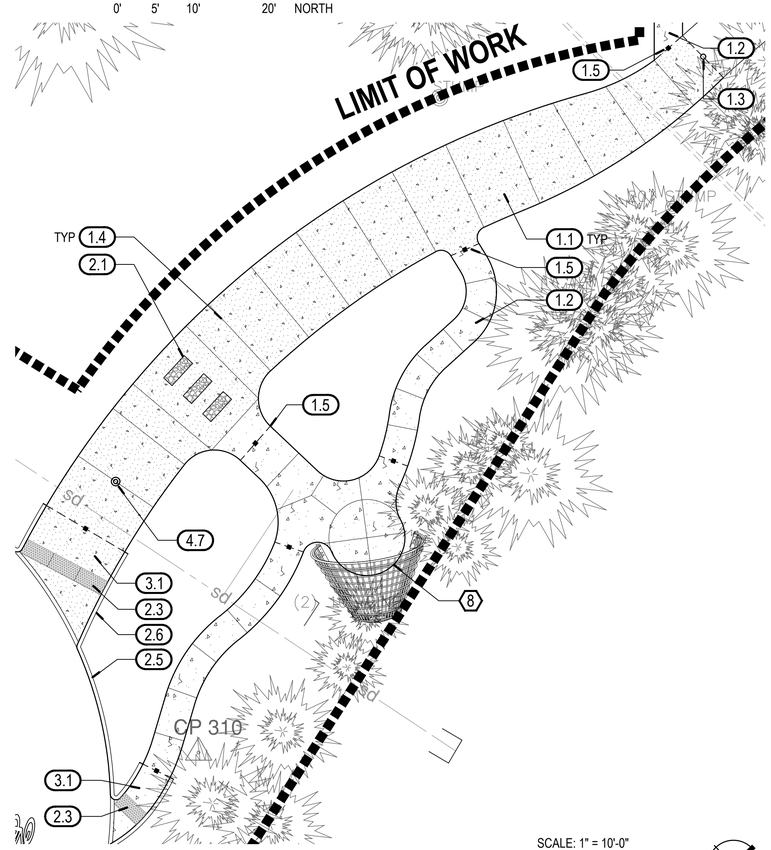

3 BURDEN BASKET INTERPRETIVE NODE

SCALE: 1" = 10'-0"

0' 5' 10' 20' NORTH

MATERIALS LEGEND

SYMBOL	ITEM
	CONCRETE PAVING - VEHICULAR (BROOM FINISH)
	CONCRETE PAVING - VEHICULAR (EXPOSED AGGREGATE FINISH)
	CONCRETE PAVING - PEDESTRIAN (BROOM FINISH)
	CONCRETE PAVING - PEDESTRIAN (EXPOSED AGGREGATE FINISH)
	LITHOMOSAIC PAVING - N.I.C
	CONCRETE WALL
	TACTILE WARNING
STANDARD REMOVABLE	BOLLARDS (STANDARD AND REMOVABLE)
	DOWELED EXPANSION JOINT (AT STEPS, WALLS, LITHOCRETE, AND NEW PAVING MEET EXISTING PAVING
	CONTRACTION JOINT
	ISOLATION JOINT (SEPARATE POURS)

X MATERIALS KEY NOTES

1. EDGE OF PROPOSED PAVING. VERIFY EXISTING PAVING EDGE.
2. EXISTING CONCRETE PAVING.
3. PROPOSED PAVING TO MATCH FFE OF BUILDING.
4. TRIP PLANNING SIGNS - SEE SHEET F8 FOR INFORMATION ON INSTALL. SIGN STRUCTURE IS IN CONTRACT, PANELS AND CONTENT ARE N.I.C. LOCATION AND ALIGNMENT TO BE APPROVED BY LANDSCAPE ARCHITECT.
5. SEE DETAILS FOR JOINT TYPES AT STAIRS AND WALLS.
6. FIELD VERIFY EXISTING CONDITIONS IN PORTE COCHERE.
7. REDWOOD TREE INTERPRETIVE NODE. SCULPTURAL FEATURES PROVIDED AND INSTALLED BY OTHERS. CONTRACTOR TO PROVIDE FOUNDATION AGGREGATE AND CONCRETE. SEE F4-F5 FOR REFERENCE, FINAL SHOP DRAWINGS TO BE PROVIDED BY SELECTED FABRICATOR. COORDINATE INSTALLATION WITH INTERPRETIVE SIGN BUILDERS.
8. BURDEN BASKET INTERPRETIVE NODE. SCULPTURAL FEATURES PROVIDED AND INSTALLED BY OTHERS. CONTRACTOR TO PROVIDE FOUNDATION AGGREGATE AND CONCRETE. SEE F1-F3 FOR REFERENCE, FINAL SHOP DRAWINGS TO BE PROVIDED BY SELECTED FABRICATOR. COORDINATE INSTALLATION WITH INTERPRETIVE SIGN BUILDERS.
9. TOLOWA WALK ENTRY EXHIBIT BY OTHERS - N.I.C. ALUMINUM BLADES TO BE ALIGNED ON CENTERLINE OF STANDARD VEHICULAR CONCRETE BAND. LOCATION AND ALIGNMENT TO BE APPROVED BY LANDSCAPE ARCHITECT. COORDINATE INSTALLATION WITH INTERPRETIVE SIGN BUILDERS.
10. SEE CIVIL FOR PROPOSED DRAINAGE FEATURES.
11. TRASH / RECYCLING OWNER FURNISHED CONTRACTOR INSTALLED - N.I.C.
12. MONUMENT SIGN OWNER FURNISHED CONTRACTOR INSTALLED - N.I.C.
13. RELOCATED RIGHT TURN 25MPH SIGN.
14. PROPOSED NEW DIRECTIONAL SIGN.
15. TOURIST INFORMATION DIRECTIONAL SIGN.
16. RELOCATED RIGHT TURN 25MPH SIGN.
17. APPROXIMATE GATEWAY FOOTING LOCATION - GATEWAY AND GATEWAY FOOTINGS, N.I.C, TO BE COORDINATED WITH CCA PLANS.
18. LITHOCRETE WITH LITHOMOSAIC - N.I.C., AGGREGATE BASE IS IN CONTRACT. FINAL JOINTING PATTERN OF LITHOCRETE TO BE SUBMITTED BY CONTRACTOR TO BE APPROVED BY LANDSCAPE ARCHITECT.

GREEN WORKS
LANDSCAPE ARCHITECTURE
ENVIRONMENTAL DESIGN
110 SE Main St., Suite 100
Portland, OR 97214
Ph: 503 222 5612
Fax: 503 222 2283
Email: info@greenworkspc.com

LICENSED LANDSCAPE ARCHITECT
BENJAMIN JOHNSON 6183
Signature
Renewal Date
Date
STATE OF CALIFORNIA

VERIFY SCALE: DRAWINGS ARE TO SCALE IF BAR MEASURES 1"
0" 1/2" 1"

CITY OF CRESCENT CITY CALIFORNIA 1854

Project: Beachfront Park
Clean CA
City of Crescent City
377 J STREET
CRESCENT CITY, CA, 95531
707-464-9506
ewier@crescentcity.org

Submittal: BID SET

Sheet Title: Materials Plan Enlargements

© GREENWORKS, P.C. 2024, ALL RIGHTS RESERVED
THESE DRAWINGS ARE THE PROPERTY OF GREENWORKS, P.C., AND ARE NOT TO BE USED OR REPRODUCED IN ANY MANNER, EXCEPT WITH THE PRIOR WRITTEN PERMISSION OF GREENWORKS, P.C.

Date:	05/09/2025
Revisions:	
Drawn By:	SS/MM/PG
Checked By:	BJ/GM
Job No.	220065
Approved:	BJ

L4.05

G:\PROJECTS\220065.1_CRESCENT_CITY_BEACHFRONT_PARK\02_CLEAN_CA\02_PRODUCTION\01_CAD\01_PLOT_SHEETS\220065_MATL_CCA.DWG

LAYOUT POINT TABLE

POINT #	DESCRIPTION	NORTHING	EASTING
1	BOLLARD CP	2528928.9657	5962878.2222
2	DRAIN CP	2528921.0679	5962882.0371
3	PAVING PT	2528926.6148	5962889.2464
4	PAVING EP	2528901.5674	5962870.9727
5	BOLLARD CP	2528936.4426	5962878.8104
6	PAVING PT	2528963.0175	5962878.6878
7	PAVING PT	2528938.5778	5962890.1876
8	PAVING CP	2528933.8940	5962917.4104
9	CURB EP	2528942.3883	5962927.4686
10	DRAIN CP	2528943.4818	5962926.4554
11	PAVING CP	2528947.7945	5962954.7665
12	PAVING PT	2528956.1313	5962956.6936
13	PAVING PT	2528942.6433	5962957.8432
14	PAVING PT	2528934.4707	5962963.8664
15	PAVING CP	2528903.8302	5962959.0928
16	PAVING RADIUS CP	2528928.2876	5962969.0064
17	PAVING EDGE	2528923.6547	5962976.9767
18	BIKE RACK CP	2528933.1468	5962979.8445
19	PAVING CP	2528944.5952	5962969.4331
20	WALL EP	2528964.8480	5962969.5599

LAYOUT POINT TABLE

POINT #	DESCRIPTION	NORTHING	EASTING
21	WALL PT	2528996.1486	5963006.8463
22	WALL PT	2528999.4350	5963002.6574
23	WALL PT	2529000.5300	5962995.0333
24	WALL PT	2528998.7756	5962986.9911
25	WALL EP	2528989.6635	5962972.4737
26	HANDRAIL CP	2528993.6085	5962968.6439
27	HANDRAIL CP	2528998.6843	5962974.9314
28	HANDRAIL CP	2529002.6411	5962981.9763
29	WALL EP	2529007.9017	5962980.3596
30	WALL EP	2528997.0636	5962964.3621
31	PAVING PT	2529004.3816	5962956.3405
32	BOLLARD CP	2529014.6799	5962964.0942
33	PAVING EP	2529007.3784	5962944.3742
34	PAVING EP	2529030.2547	5962978.2271
35	PAVING PT	2529018.0075	5962976.5540
36	PAVING EDGE	2529015.4665	5962977.5096
37	WALL EP	2528991.1257	5963008.3468
38	PAVING RADIUS CP	2528982.1263	5962986.1489
39	WALL EP	2528997.6215	5962984.2200
40	CURB EP	2529021.8880	5963044.8132

LAYOUT POINT TABLE

POINT #	DESCRIPTION	NORTHING	EASTING
41	PAVING EDGE	2529029.7526	5963046.4685
42	SIGN CP	2529512.6272	5963866.8641
43	PAVING PT	2528999.3793	5963040.0991
44	PAVING PT	2528991.5365	5963039.1258
45	SIGN CP	2528987.4198	5963028.9246
46	PAVING EP	2528986.7725	5963031.8320
47	SIGN CP	2529030.9828	5962989.6175
48	DRAIN CP	2529025.9730	5962981.4602
49	PAVING RADIUS CP	2529022.2313	5962987.7861
50	DRAIN CP	2529002.7718	5962947.1442
51	PAVING EP	2528947.9050	5962974.3268
52	WALL EP	2528958.4811	5962990.0728
53	WALL EP	2528969.7142	5963006.6534
54	STAIR CL	2529002.8236	5962972.1267
55	PAVING PT (ELLIPSE)	2528994.1308	5962978.0160
56	PAVING RADIUS CP	2528938.2649	5962960.4583
57	PAVING RADIUS CP	2528994.9018	5963044.0932
58	PAVING PT	2529019.0583	5963062.2639
59	PAVING RADIUS CP	2529013.2290	5963060.8431
60	PAVING PT	2529026.1951	5963066.6512

LAYOUT POINT TABLE

POINT #	DESCRIPTION	NORTHING	EASTING
61	PAVING PT	2529030.5272	5963064.7878
62	PAVING PT	2529020.2865	5963083.6397
63	PAVING PT	2529034.7062	5963112.4263
64	PAVING PT	2529048.9305	5963116.3305
65	PAVING PT	2529067.3594	5963129.9465
66	PAVING EDGE	2529072.8150	5963137.9040
67	PAVING EP	2529064.1700	5963143.8310
68	PAVING PT	2529059.8208	5963137.4873
69	PAVING PT	2529048.0186	5963128.6383
70	PAVING EDGE	2529010.6189	5963120.2568
71	WALL EP	2529002.9275	5963098.7337
72	PAVING EDGE	2528982.6942	5963106.7339
73	PAVING EDGE	2528982.5146	5963118.7591
74	PAVING PT	2528971.4725	5963119.2598
75	PAVING RADIUS CP	2528729.8553	5963072.2723
76	PAVING PT	2528979.1452	5963144.6417
77	PAVING EDGE	2528969.9109	5963141.9756
78	PAVING PT	2528957.1154	5963127.6781
79	PAVING PT	2528951.3424	5963121.7703
80	PAVING PT	2528940.6303	5963123.9702

LAYOUT POINT TABLE

POINT #	DESCRIPTION	NORTHING	EASTING
81	PAVING PT	2528932.1551	5963113.7154
82	PAVING EP	2528910.1194	5963113.9727
83	PAVING PT	2528911.4698	5963114.2547
84	PAVING PT	2528923.3313	5963124.1787
85	PAVING EP	2528908.6290	5963121.1080
86	PAVING EP	2529033.7683	5963052.8461
87	BOLLARD CP	2529032.0641	5963049.4893
88	PAVING PT	2529070.0815	5963065.6640
89	PAVING RADIUS CP	2529071.5304	5963056.2752
90	PAVING EP	2529081.1046	5963053.4760
91	PAVING EP	2529099.2294	5963080.2975
92	PAVING EP	2529076.3002	5963095.7921
93	PAVING PT	2529068.0960	5963077.4997
94	DRINKING FOUNTAIN CP	2528996.1949	5962933.0389
95	PAVING EP	2529000.9001	5962934.7875
96	PAVING EP	2528995.7677	5962927.1924
97	BOLLARD CP	2529078.4344	5963076.4922
98	PAVING EDGE	2529075.2952	5963081.6137
99	ALIGNMENT BP	2528832.2100	5963058.9758
100	PAVING EP	2528813.8618	5963073.6145

LAYOUT POINT TABLE

POINT #	DESCRIPTION	NORTHING	EASTING
101	PAVING EP	2528812.3144	5963081.1879
102	PAVING PT	2528782.8459	5963068.9987
103	PAVING PT	2528811.4621	5963081.0131
104	PAVING PT	2528800.4319	5963067.3132
105	PAVING PT	2528778.2364	5963066.0611
106	PAVING PT	2528776.0964	5963066.7267
107	PAVING PT	2528772.0164	5963062.5891
108	PAVING PT	2528772.6951	5963064.5417
109	PAVING PT	2528746.7791	5963053.3380
110	PAVING PT	2528740.7228	5963057.3946
111	PAVING PT	2528739.3271	5963065.8364
112	PAVING PT	2528745.5111	5963071.4930
113	PAVING PT	2528734.7640	5963056.6529
114	PAVING PT	2528734.2070	5963060.0219
115	PAVING PT	2528727.9225	5963066.5536
116	PAVING PT	2528730.1860	5963050.8499
117	PAVING EP	2528702.9164	5963052.3706
118	PAVING EP	2528708.4750	5963039.2206
119	BOLLARD CP	2528723.2367	5963044.5795
120	PAVING EP	2528688.3599	5963067.9188

LAYOUT POINT TABLE

POINT #	DESCRIPTION	NORTHING	EASTING
121	CURB PT	2528676.1877	5963074.1305
122	CURB RADIUS CP	2528677.0139	5963076.4901
123	CURB EP	2528674.0544	5963077.5044
124	CURB RADIUS CP	2528659.4152	5963026.2323
125	CURB PT	2528710.1604	5963025.5355
126	CURB RADIUS CP	2528715.6599	5963025.4600
127	BOLLARD CP	2528940.5556	5962890.3623
128	BOLLARD CP	2528941.7731	5962916.0250
129	BOLLARD CP	2528948.6176	5962938.8623
130	BOLLARD CP	2528963.3871	5962963.8378
131	PAVING EP	2528997.5859	5962937.0271
132	PAVING EP	2528992.4497	5962929.4346
133	PAVING EDGE	2529021.9757	5963043.6828
134	BOLLARD CP	2528995.8982	5963011.8253
135	BOLLARD CP	2529009.8266	5963030.7797
136	PAVING PT	2529032.6730	5963052.2020
137	WALL EP	2529003.7721	5963097.4644
138	SIGN CP	2529402.3792	5963722.3475
139	WALL EP	2528989.6295	5963099.3366
140	PAVING EDGE	2529020.7774	5963101.3987

LAYOUT POINT TABLE

POINT #	DESCRIPTION	NORTHING	EASTING
141	PAVING RADIUS CP	2529039.5535	5963091.9933
142	EXPOSED AGGREGATE CP	2528959.3162	5963115.5978
143	PAVING RADIUS CP	2528972.3122	5963130.7291
144	PAVING RADIUS CP	2528952.2132	5963126.6939
145	PAVING RADIUS CP	2529029.0940	5963067.4234
146	PAVING RADIUS CP (ELLIPSE)	2528958.5634	5963002.1125
147	PAVING RADIUS CP (ELLIPSE)	2528972.0971	5962997.0233
148	PAVING RADIUS CP (ELLIPSE)	2528982.3163	5962996.3081
149	PAVING RADIUS CP (ELLIPSE)	2528991.2553	5962999.6235
150	PAVING PT (ELLIPSE)	2528991.0397	5963008.3451
151	PAVING PT (ELLIPSE)	2528983.5531	5963006.5350
152	PAVING PT (ELLIPSE)	2528976.7348	5963001.9235
153	PAVING PT (ELLIPSE)	2528970.1219	5962994.2818
154	WALL EDGE	2528990.6768	5962971.3629
155	PAVING RADIUS CP	2528914.6263	5962888.3225
156	PAVING EP	2528909.3794	5962880.4535
157	PAVING EP	2528901.8868	5962880.7349
158	PAVING RADIUS CP	2528953.1286	5962889.9451
159	PAVING RADIUS CP	2529066.2407	5963089.1022
160	DRAIN CP	2529074.2506	5963085.5802

LAYOUT POINT TABLE

POINT #	DESCRIPTION	NORTHING	EASTING
161	PAVING RADIUS CP	2528995.5165	5962948.2529
162	DRAIN CP	2528949.1852	5963015.5616
163	PAVING EP	2528724.4535	5963011.5548
164	PAVING EP	2528724.7619	5963019.0255
165	DRAIN CP	2528718.6764	5963017.3354
166	PAVING EP	2528720.7662	5963019.2134
167	PAVEMENT STRIPING EDGE	2528671.2751	5963062.8300
168	CURB RAMP EDGE	2528715.8582	5963044.7718
169	CURB RAMP EDGE	2528716.2086	5963050.7616
170	TACTILE WARNING CP	2528710.0736	5963045.2583
171	TACTILE WARNING CP	2528688.5388	5963070.4136
172	PAVING RADIUS CP	2528729.8310	5963055.8373
173	EXPOSED AGGREGATE CP	2528739.4542	5963046.6721
174	CURB RAMP EDGE	2528694.3498	5963068.4371
175	SIGN CP	2529404.4850	5963671.4892
176	DRAIN CP	2528988.4850	5962972.4682
177	DRAIN CP	2528997.1896	5962985.3165
178	PAVING EDGE	2529013.9707	5963053.8530
179	DRAIN CP	2528989.5326	5963075.1170
180	ALIGNMENT BP	2529018.8124	5962961.2945

LAYOUT POINT TABLE

POINT #	DESCRIPTION	NORTHING	EASTING
181	ALIGNMENT BP	2528934.5994	5962875.6627
182	ALIGNMENT BP	2528953.4503	5962963.4338
183	ALIGNMENT BP	2528998.4798	5963029.5902
184	ALIGNMENT BP	2528937.9908	5962973.9075
185	ALIGNMENT BP	2529006.1352	5962969.8832
186	ALIGNMENT BP	2529068.4925	5963140.8675
187	ALIGNMENT BP	2528961.6235	5963122.4827
188	ALIGNMENT BP	2528705.6877	5963045.8261
189	ALIGNMENT BP	2528739.5887	5963045.8629
190	ALIGNMENT BP	2528777.5266	5963058.7281
191	PAVING CP	2528735.6773	5963076.1936
192	PAVING CP	2528975.9950	5963138.2276
193	PAVING EP	2529102.5269	5963180.8073
194	PAVING EP	2529094.4796	5963186.5819
195	PAVING EP	2529059.4805	5963116.8789
196	PAVING EP	2529073.6630	5963137.2730

GREEN WORKS

LANDSCAPE ARCHITECTURE
ENVIRONMENTAL DESIGN

110 SE Main St., Suite 100
Portland, OR 97214
Ph: 503 222 5612
Fax: 503 222 2283
Email: info@greenworkspc.com

LICENSED LANDSCAPE ARCHITECT
BENJAMIN JOHNSON 6193
Signature
Renewal Date
Date
STATE OF CALIFORNIA

VERIFY SCALE: DRAWINGS ARE TO SCALE IF BAR MEASURES 1"
0" 1/2" 1"

CITY OF CRESCENT CITY CALIFORNIA 1854

Project: Beachfront Park
Clean CA
City of Crescent City
377 J STREET
CRESCENT CITY, CA, 95531
707-464-9506
ewier@crescentcity.org

Submittal: BID SET

Sheet Title: Layout Schedule

© GREENWORKS, P.C. 2024, ALL RIGHTS RESERVED

THESE DRAWINGS ARE THE PROPERTY OF GREENWORKS, P.C., AND ARE NOT TO BE USED OR REPRODUCED IN ANY MANNER, EXCEPT WITH THE PRIOR WRITTEN PERMISSION OF GREENWORKS, P.C.

Date:	05/09/2025
Revisions:	
Drawn By:	SS/MM/PG
Checked By:	BJ/GM
Job No.	220065
Approved:	BJ

L5.00

Sheet No. 25 of 63

G:\PROJECTS\220065.1_CRESCENT_CITY_BEACHFRONT_PARK\02_CLEAN_CA\02_PRODUCTION\01_CAD\01_PLOT_SHEETS\220065_LAYO_CCA.DWG

ALIGNMENT - (1)				
SEGMENT ID	LENGTH	RADIUS	LINE/CHORD DIRECTION	CHORD LENGTH
C1	88.36	110.00	N78° 53' 44.48"E	86.01
L1	77.93		N55° 52' 58.03"E	
C2	115.37	110.00	N25° 50' 12.55"E	110.15

ALIGNMENT - (2)				
SEGMENT ID	LENGTH	RADIUS	LINE/CHORD DIRECTION	CHORD LENGTH
L2	32.26		S34° 07' 01.97"E	

ALIGNMENT - (3)				
SEGMENT ID	LENGTH	RADIUS	LINE/CHORD DIRECTION	CHORD LENGTH
C3	41.98	25.05	S23° 26' 56.38"W	37.24

ALIGNMENT - (4)				
SEGMENT ID	LENGTH	RADIUS	LINE/CHORD DIRECTION	CHORD LENGTH
L3	55.31		S34° 07' 01.97"E	

ALIGNMENT - (5)				
SEGMENT ID	LENGTH	RADIUS	LINE/CHORD DIRECTION	CHORD LENGTH
L4	47.71		S34° 07' 01.97"E	

ALIGNMENT - (6)				
SEGMENT ID	LENGTH	RADIUS	LINE/CHORD DIRECTION	CHORD LENGTH
C4	154.39	117.00	S86° 18' 48.12"E	143.43

ALIGNMENT - (7)				
SEGMENT ID	LENGTH	RADIUS	LINE/CHORD DIRECTION	CHORD LENGTH
L5	8.33		S55° 33' 55.87"W	
C5	19.86	30.00	S36° 36' 11.41"W	19.50
C7	113.25	205.00	S01° 48' 52.77"W	111.82
C8	19.14	42.50	S01° 06' 23.53"E	18.98
L6	8.18		S11° 47' 54.35"W	

ALIGNMENT - (8)				
SEGMENT ID	LENGTH	RADIUS	LINE/CHORD DIRECTION	CHORD LENGTH
L7	30.25		S34° 07' 01.97"E	

ALIGNMENT - (9)				
SEGMENT ID	LENGTH	RADIUS	LINE/CHORD DIRECTION	CHORD LENGTH
L9	9.76		S65° 36' 46.65"E	
C11	9.69	7.00	S25° 57' 48.12"E	8.93
L10	5.04		S13° 41' 10.41"W	
C12	9.05	13.00	S06° 15' 41.14"E	8.87
C13	14.50	30.00	S12° 21' 28.30"E	14.36

ALIGNMENT - (10)				
SEGMENT ID	LENGTH	RADIUS	LINE/CHORD DIRECTION	CHORD LENGTH
L13	14.42		S80° 36' 43.11"E	
C20	11.32	10.00	S48° 10' 52.77"E	10.73
C21	14.67	25.00	S01° 03' 34.25"W	14.46
C22	11.76	19.00	S00° 08' 32.46"W	11.57
L14	5.79		S17° 35' 06.00"E	
C23	8.14	23.50	S07° 39' 37.66"E	8.10
C24	5.58	15.75	S12° 24' 19.94"W	5.55

ALIGNMENT - (11)				
SEGMENT ID	LENGTH	RADIUS	LINE/CHORD DIRECTION	CHORD LENGTH
C27	91.19	114.00	N14° 25' 36.56"E	88.78
C28	22.47	50.00	N24° 27' 58.58"E	22.28
L19	1.16		N11° 35' 24.17"E	

ALIGNMENT - (12)				
SEGMENT ID	LENGTH	RADIUS	LINE/CHORD DIRECTION	CHORD LENGTH
C19	29.88	13.50	N64° 14' 46.28"E	24.14

GREEN WORKS

LANDSCAPE ARCHITECTURE
ENVIRONMENTAL DESIGN

110 SE Main St., Suite 100
Portland, OR 97214
Ph: 503 222 5612
Fax: 503 222 2283
Email: info@greenworkspc.com

LICENSED LANDSCAPE ARCHITECT
BENJAMIN JOHNSON 6493
Signature
Renewal Date
Date
STATE OF CALIFORNIA

VERIFY SCALE: DRAWINGS ARE TO SCALE IF BAR MEASURES 1"
0" 1/2" 1"

CITY OF CRESCENT CITY
1854
CALIFORNIA

Project:
Beachfront Park
Clean CA
City of Crescent City
377 J STREET
CRESCENT CITY, CA, 95531
707-464-9506
ewier@crescentcity.org

Submittal: BID SET

Sheet Title:
Layout Schedule

© GREENWORKS, P.C.
2024, ALL RIGHTS RESERVED

THESE DRAWINGS ARE THE PROPERTY OF GREENWORKS, P.C., AND ARE NOT TO BE USED OR REPRODUCED IN ANY MANNER, EXCEPT WITH THE PRIOR WRITTEN PERMISSION OF GREENWORKS, P.C.

Date:	05/09/2025
Revisions:	
Drawn By:	SS/MM/PG
Checked By:	BJ/GM
Job No.	220065
Approved:	BJ

L5.01

Sheet No. 26 of 63

G:\PROJECTS\220065.1_CRESCENT_CITY_BEACHFRONT_PARK\02_CLEAN_CA\02_PRODUCTION\01_CAD\01_PLOT_SHEETS\220065_LAYO_CCA.DWG

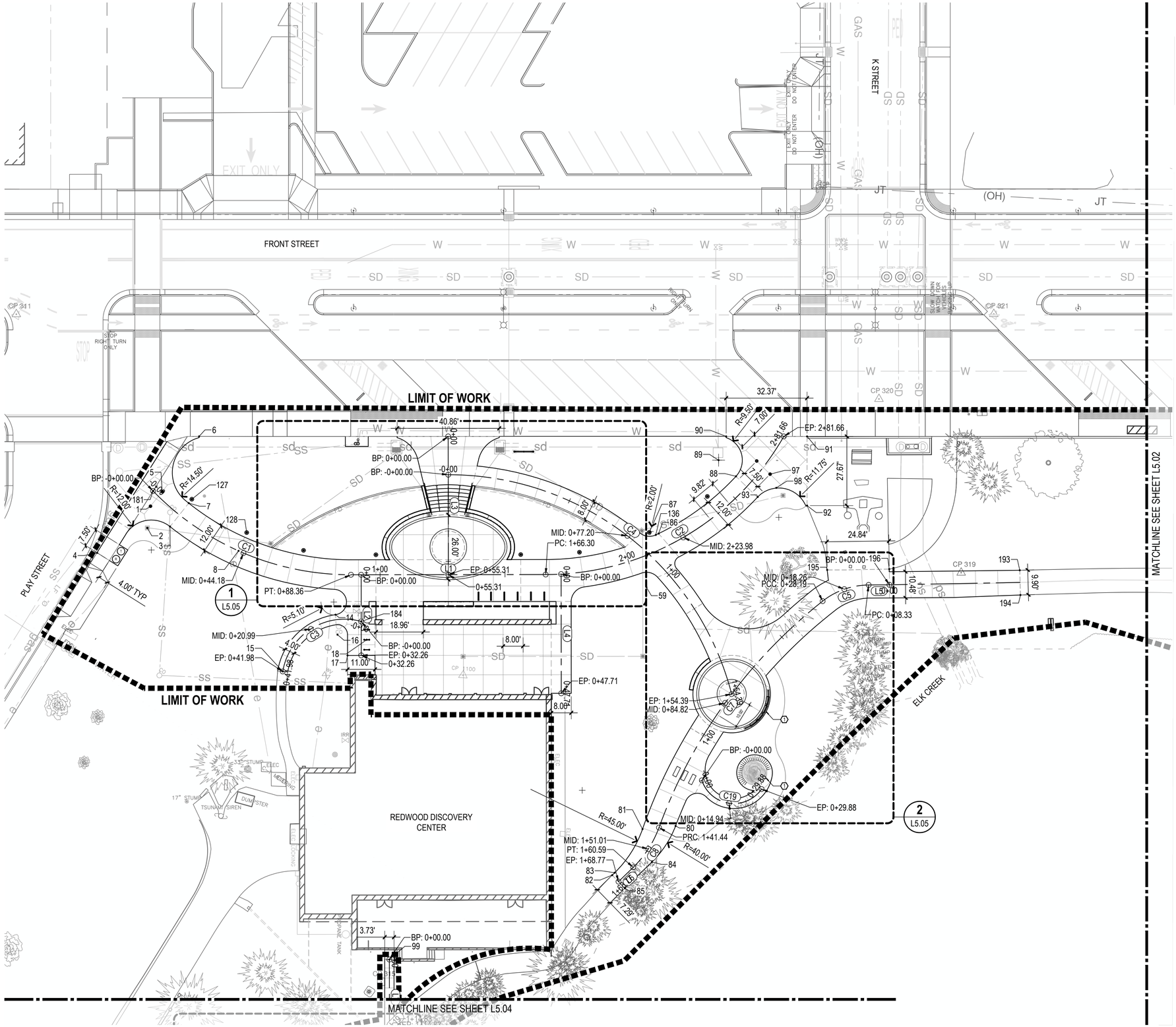

LEGEND

SYMBOL	ITEM
20'-0"	LINEAR DIMENSION
R=5'-0"	RADIUS DIMENSION
.XXX	POINT
0+00	PATH CENTERLINE AND STATION

GENERAL LAYOUT NOTES

1. VERIFY ALL DIMENSIONS AND PROJECT LAYOUT PRIOR TO ANY CONSTRUCTION OR INSTALLATION OF MATERIALS. IF LAYOUT CONFLICTS ARISE, CONTACT THE OWNER'S REPRESENTATIVE.
2. OWNER'S REPRESENTATIVE TO APPROVE FRAMEWORK FOR PATHS PRIOR TO CONTRACTOR PLACING CONCRETE.
3. CONTRACTOR SHALL EMPLOY A PROFESSIONAL LAND SURVEYOR TO STAKE PATHS AND PAVING. FINAL LAYOUT WILL BE APPROVED OF BY OWNER'S REPRESENTATIVE.
4. DIMENSIONS ARE TO FACE OF STRUCTURES, PAVING, WALLS, AND CURBS, ETC. UNLESS INDICATED OTHERWISE.
5. WRITTEN DIMENSIONS TAKE PRECEDENT OVER SCALE OF PLANS.
6. ALL CURVED WALLS AND WALKS SHALL HAVE SMOOTH, CONTINUOUS CURVES AS INDICATED.

(X) LAYOUT KEY NOTES

1. LOCATION OF ART AND INTERPRETIVE ELEMENTS TO BE APPROVED BY THE OWNER'S REPRESENTATIVE. FINAL SHOP DRAWINGS AND STRUCTURAL PLANS TO BE PROVIDED BY SELECTED FABRICATOR.

KEY MAP

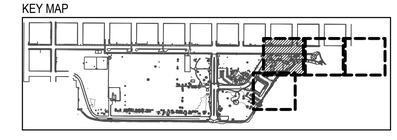

NORTH

SCALE: 1" = 20'-0"

0' 10' 20' 40'

GREEN WORKS
LANDSCAPE ARCHITECTURE
ENVIRONMENTAL DESIGN
110 SE Main St., Suite 100
Portland, OR 97214
Ph: 503 222 5612
Fax: 503 222 2283
Email: info@greenworkspc.com

LICENSED LANDSCAPE ARCHITECT
BENJAMIN JOHNSON 6183
Signature
Renewal Date
Date
STATE OF CALIFORNIA

VERIFY SCALE: DRAWINGS ARE TO SCALE IF BAR MEASURES 1"
0" 1/2" 1"

CITY OF CRESCENT CITY CALIFORNIA 1854

Project: Beachfront Park Clean CA

City of Crescent City
377 J STREET
CRESCENT CITY, CA, 95531
707-464-9506
ewier@crescentcity.org

Submittal: BID SET

Sheet Title: Layout Plan

© GREENWORKS, P.C.
2024, ALL RIGHTS RESERVED

THESE DRAWINGS ARE THE PROPERTY OF GREENWORKS, P.C., AND ARE NOT TO BE USED OR REPRODUCED IN ANY MANNER, EXCEPT WITH THE PRIOR WRITTEN PERMISSION OF GREENWORKS, P.C.

Date:	05/09/2025
Revisions:	
Drawn By:	SS/MM/PG
Checked By:	BJ/GM
Job No.	220065
Approved:	BJ

L5.02

Sheet No. 27 of 63

G:\PROJECTS\220065_CRESCENT_CITY_BEACHFRONT_PARK\02_CLEAN_CA\02_PRODUCTION\01_CAD\01_PLOT_SHEETS\220065_LAYO_CCA.DWG

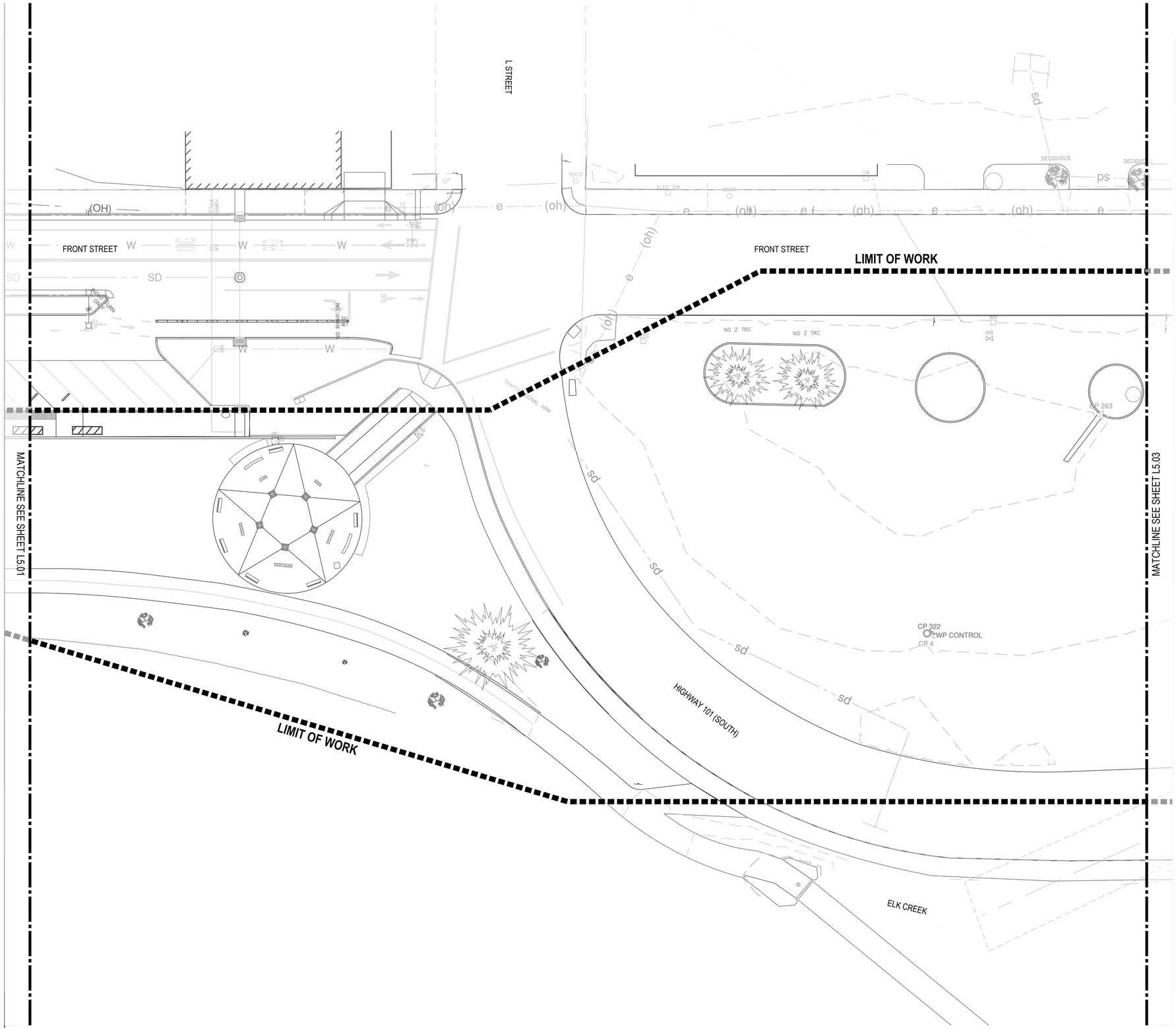

LEGEND

SYMBOL	ITEM
20'-0"	LINEAR DIMENSION
R=5'-0"	RADIUS DIMENSION
.XXX	POINT
0+00	PATH CENTERLINE AND STATION

GENERAL LAYOUT NOTES

1. VERIFY ALL DIMENSIONS AND PROJECT LAYOUT PRIOR TO ANY CONSTRUCTION OR INSTALLATION OF MATERIALS. IF LAYOUT CONFLICTS ARISE, CONTACT THE OWNER'S REPRESENTATIVE.
2. OWNER'S REPRESENTATIVE TO APPROVE FRAMEWORK FOR PATHS PRIOR TO CONTRACTOR PLACING CONCRETE.
3. CONTRACTOR SHALL EMPLOY A PROFESSIONAL LAND SURVEYOR TO STAKE PATHS AND PAVING. FINAL LAYOUT WILL BE APPROVED OF BY OWNER'S REPRESENTATIVE.
4. DIMENSIONS ARE TO FACE OF STRUCTURES, PAVING, WALLS, AND CURBS, ETC. UNLESS INDICATED OTHERWISE.
5. WRITTEN DIMENSIONS TAKE PRECEDENT OVER SCALE OF PLANS.
6. ALL CURVED WALLS AND WALKS SHALL HAVE SMOOTH, CONTINUOUS CURVES AS INDICATED.

(X) LAYOUT KEY NOTES

1. LOCATION OF ART AND INTERPRETIVE ELEMENTS TO BE APPROVED BY THE OWNER'S REPRESENTATIVE. FINAL SHOP DRAWINGS AND STRUCTURAL PLANS TO BE PROVIDED BY SELECTED FABRICATOR.

KEY MAP

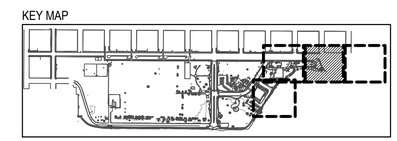

NORTH

SCALE: 1" = 20'-0"

0' 10' 20' 40'

GREEN WORKS
LANDSCAPE ARCHITECTURE
ENVIRONMENTAL DESIGN
110 SE Main St., Suite 100
Portland, OR 97214
Ph: 503 222 5612
Fax: 503 222 2283
Email: info@greenworkspc.com

LICENSED LANDSCAPE ARCHITECT
BENJAMIN JOHNSON 6183
Signature
Renewal Date
Date
STATE OF CALIFORNIA

VERIFY SCALE: DRAWINGS ARE TO SCALE IF BAR MEASURES 1"
0" 1/2" 1"

CITY OF CRESCENT CITY CALIFORNIA 1854

Project:
Beachfront Park
Clean CA
City of Crescent City
377 J STREET
CRESCENT CITY, CA, 95531
707-464-9506
ewier@crescentcity.org

Submittal: BID SET

Sheet Title:
Layout Plan

© GREENWORKS, P.C.
2024, ALL RIGHTS RESERVED

THESE DRAWINGS ARE THE PROPERTY OF GREENWORKS, P.C., AND ARE NOT TO BE USED OR REPRODUCED IN ANY MANNER, EXCEPT WITH THE PRIOR WRITTEN PERMISSION OF GREENWORKS, P.C.

Date:	05/09/2025
Revisions:	
Drawn By:	SS/MM/PG
Checked By:	BJ/GM
Job No.	220065
Approved:	BJ

L5.03

Sheet No. 28 of 63

G:\PROJECTS\220065.1_CRESCENT_CITY_BEACHFRONT_PARK\02_CLEAN_CA\02_PRODUCTION\01_CAD\01_PLOT_SHEETS\220065_LAY0_CCA.DWG

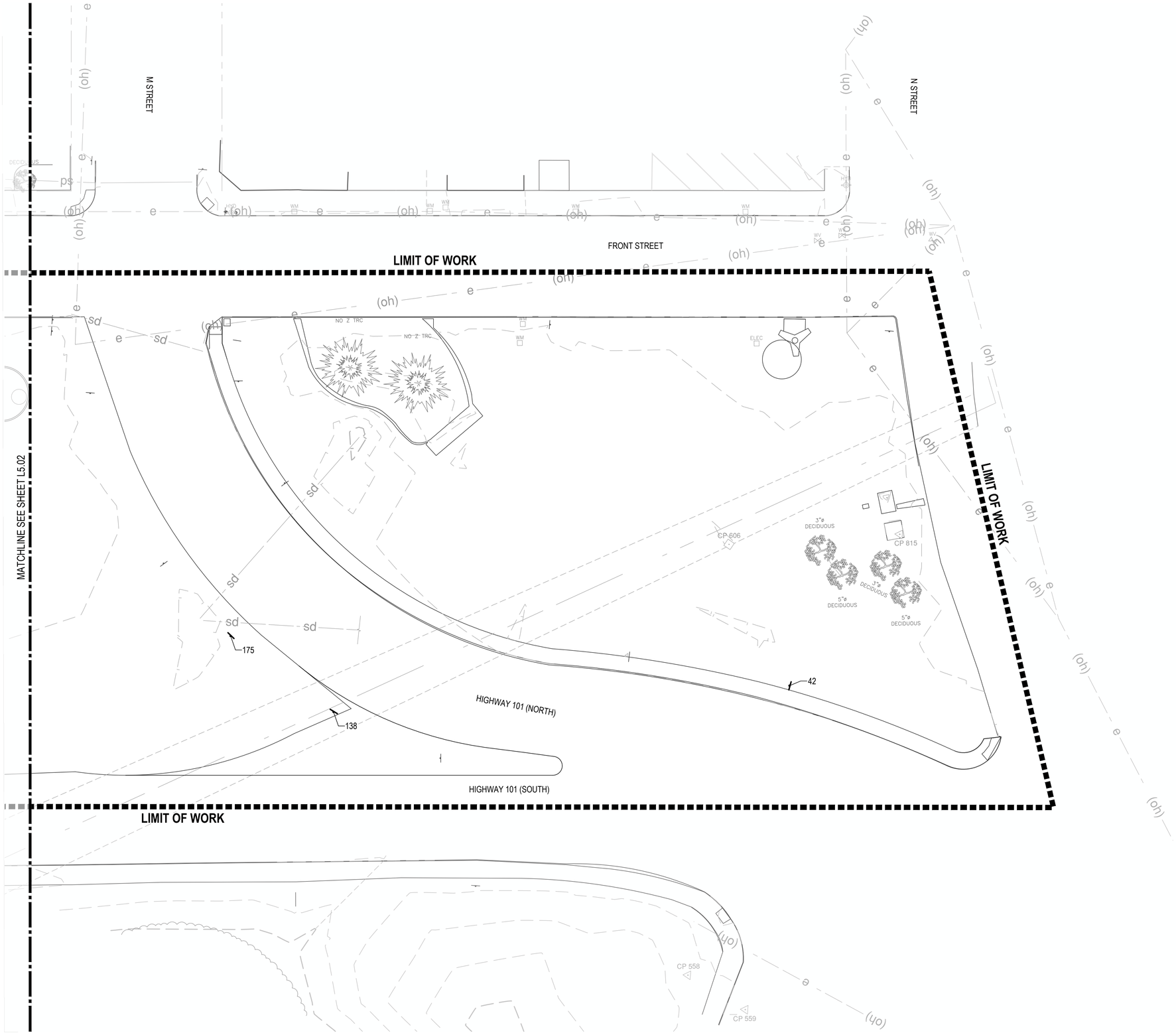

LEGEND

SYMBOL	ITEM
20'-0"	LINEAR DIMENSION
R=5'-0"	RADIUS DIMENSION
XXX	POINT
0+00	PATH CENTERLINE AND STATION

GENERAL LAYOUT NOTES

1. VERIFY ALL DIMENSIONS AND PROJECT LAYOUT PRIOR TO ANY CONSTRUCTION OR INSTALLATION OF MATERIALS. IF LAYOUT CONFLICTS ARISE, CONTACT THE OWNER'S REPRESENTATIVE.
2. OWNER'S REPRESENTATIVE TO APPROVE FRAMEWORK FOR PATHS PRIOR TO CONTRACTOR PLACING CONCRETE.
3. CONTRACTOR SHALL EMPLOY A PROFESSIONAL LAND SURVEYOR TO STAKE PATHS AND PAVING. FINAL LAYOUT WILL BE APPROVED OF BY OWNER'S REPRESENTATIVE.
4. DIMENSIONS ARE TO FACE OF STRUCTURES, PAVING, WALLS, AND CURBS, ETC. UNLESS INDICATED OTHERWISE.
5. WRITTEN DIMENSIONS TAKE PRECEDENT OVER SCALE OF PLANS.
6. ALL CURVED WALLS AND WALKS SHALL HAVE SMOOTH, CONTINUOUS CURVES AS INDICATED.

LAYOUT KEY NOTES

1. LOCATION OF ART AND INTERPRETIVE ELEMENTS TO BE APPROVED BY THE OWNER'S REPRESENTATIVE. FINAL SHOP DRAWINGS AND STRUCTURAL PLANS TO BE PROVIDED BY SELECTED FABRICATOR.

KEY MAP

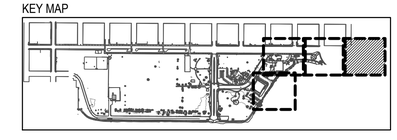

NORTH

SCALE: 1" = 20'-0"

0' 10' 20' 40'

GREEN WORKS
LANDSCAPE ARCHITECTURE
ENVIRONMENTAL DESIGN
110 SE Main St., Suite 100
Portland, OR 97214
Ph: 503 222 5612
Fax: 503 222 2283
Email: info@greenworkspc.com

LICENSED LANDSCAPE ARCHITECT
BENJAMIN JOHNSON 6162
Signature
Renewal Date
Date
STATE OF CALIFORNIA

VERIFY SCALE: DRAWINGS ARE TO SCALE IF BAR MEASURES 1"
0" 1/2" 1"

CITY OF CRESCENT CITY CALIFORNIA 1854

Project: Beachfront Park Clean CA
City of Crescent City
377 J STREET
CRESCENT CITY, CA, 95531
707-464-9506
ewier@crescentcity.org

Submittal: BID SET

Sheet Title: Layout Plan

© GREENWORKS, P.C. 2024, ALL RIGHTS RESERVED
THESE DRAWINGS ARE THE PROPERTY OF GREENWORKS, P.C., AND ARE NOT TO BE USED OR REPRODUCED IN ANY MANNER, EXCEPT WITH THE PRIOR WRITTEN PERMISSION OF GREENWORKS, P.C.

Date:	05/09/2025
Revisions:	
Drawn By:	SS/MM/PG
Checked By:	BJ/GM
Job No.	220065
Approved:	BJ

L5.04

Sheet No. 29 of 63

G:\PROJECTS\220065.1_CRESCENT_CITY_BEACHFRONT_PARK\02_CLEAN_CA\02_PRODUCTION\01_CAD\01_PLOT_SHEETS\220065_LAYO_CCA.DWG

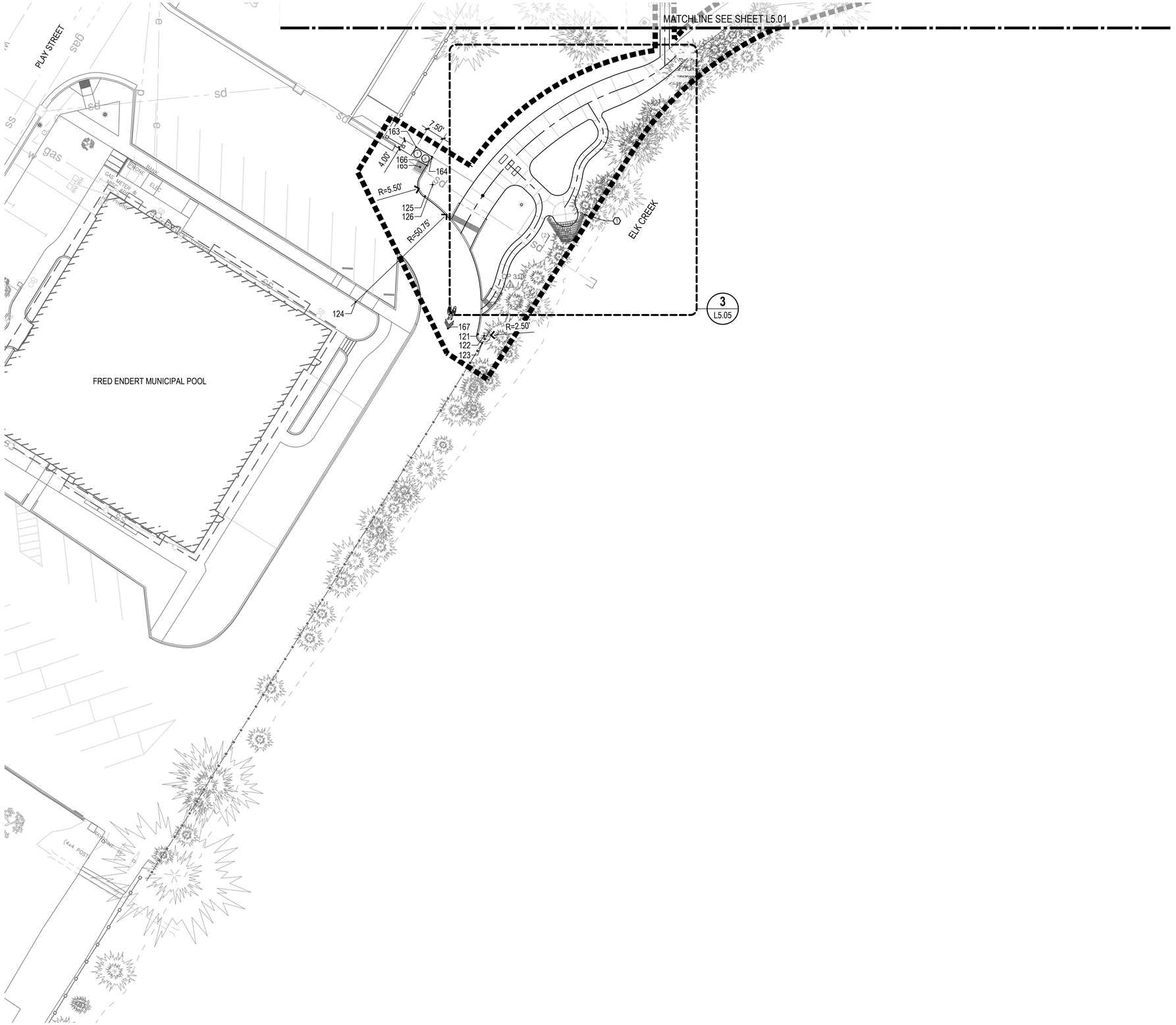

LEGEND

SYMBOL	ITEM
20'-0"	LINEAR DIMENSION
R=5'-0"	RADIUS DIMENSION
.XXX	POINT
0+00	PATH CENTERLINE AND STATION

GENERAL LAYOUT NOTES

1. VERIFY ALL DIMENSIONS AND PROJECT LAYOUT PRIOR TO ANY CONSTRUCTION OR INSTALLATION OF MATERIALS. IF LAYOUT CONFLICTS ARISE, CONTACT THE OWNER'S REPRESENTATIVE.
2. OWNER'S REPRESENTATIVE TO APPROVE FRAMEWORK FOR PATHS PRIOR TO CONTRACTOR PLACING CONCRETE.
3. CONTRACTOR SHALL EMPLOY A PROFESSIONAL LAND SURVEYOR TO STAKE PATHS AND PAVING. FINAL LAYOUT WILL BE APPROVED OF BY OWNER'S REPRESENTATIVE.
4. DIMENSIONS ARE TO FACE OF STRUCTURES, PAVING, WALLS, AND CURBS, ETC. UNLESS INDICATED OTHERWISE.
5. WRITTEN DIMENSIONS TAKE PRECEDENT OVER SCALE OF PLANS.
6. ALL CURVED WALLS AND WALKS SHALL HAVE SMOOTH, CONTINUOUS CURVES AS INDICATED.

(X) LAYOUT KEY NOTES

1. LOCATION OF ART AND INTERPRETIVE ELEMENTS TO BE APPROVED BY THE OWNER'S REPRESENTATIVE. FINAL SHOP DRAWINGS AND STRUCTURAL PLANS TO BE PROVIDED BY SELECTED FABRICATOR.

KEY MAP

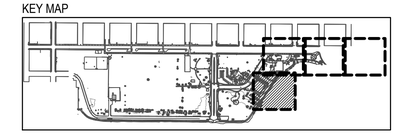

NORTH

SCALE: 1" = 20'-0"

0' 10' 20' 40'

GREEN WORKS
LANDSCAPE ARCHITECTURE
ENVIRONMENTAL DESIGN
110 SE Main St., Suite 100
Portland, OR 97214
Ph: 503 222 5612
Fax: 503 222 2283
Email: info@greenworkspc.com

LICENSED LANDSCAPE ARCHITECT
BENJAMIN JOHNSON 6193
Signature
Renewal Date
Date
STATE OF CALIFORNIA

VERIFY SCALE: DRAWINGS ARE TO SCALE IF BAR MEASURES 1"
0" 1/2" 1"

CITY OF CRESCENT CITY CALIFORNIA 1854

Project:
Beachfront Park
Clean CA
City of Crescent City
377 J STREET
CRESCENT CITY, CA, 95531
707-464-9506
ewier@crescentcity.org

Submittal: BID SET

Sheet Title:
Layout Plan

© GREENWORKS, P.C.
2024, ALL RIGHTS RESERVED

THESE DRAWINGS ARE THE PROPERTY OF GREENWORKS, P.C., AND ARE NOT TO BE USED OR REPRODUCED IN ANY MANNER, EXCEPT WITH THE PRIOR WRITTEN PERMISSION OF GREENWORKS, P.C.

Date:	05/09/2025
Revisions:	
Drawn By:	SS/MM/PG
Checked By:	BJ/GM
Job No.	220065
Approved:	BJ

L5.05

Sheet No. 30 of 63

G:\PROJECTS\220065.1_CRESCENT_CITY_BEACHFRONT_PARK\02_CLEAN_CA\02_PRODUCTION\01_CAD\01_PLOT_SHEETS\220065_LAYO_CCA.DWG

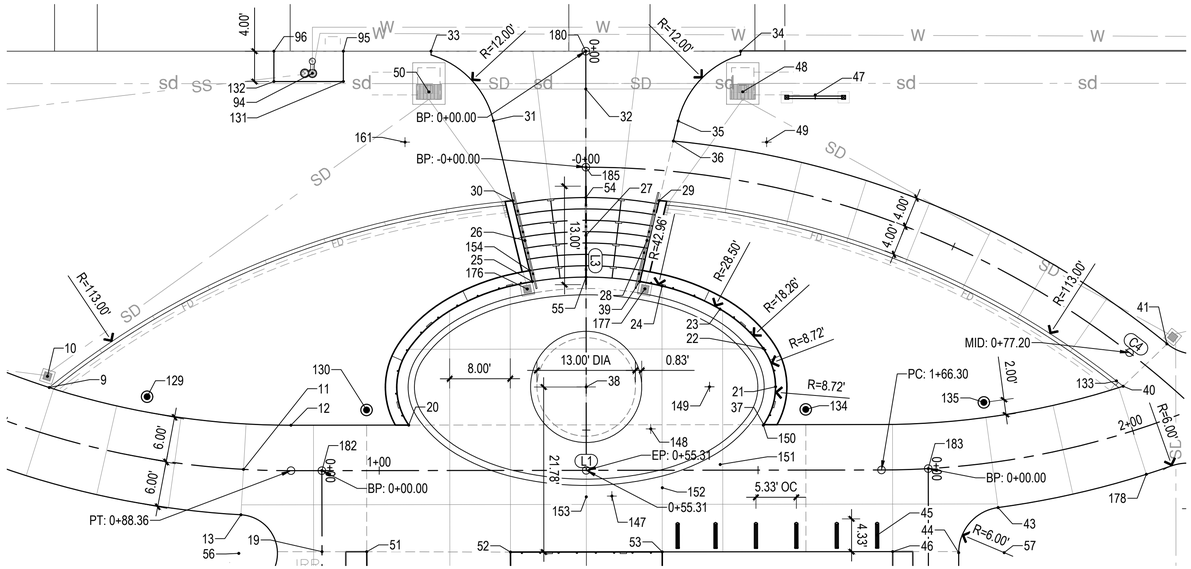

1 DISCOVERY CENTER ENTRY

SCALE: 1" = 10'-0"

0' 5' 10' 20' NORTH

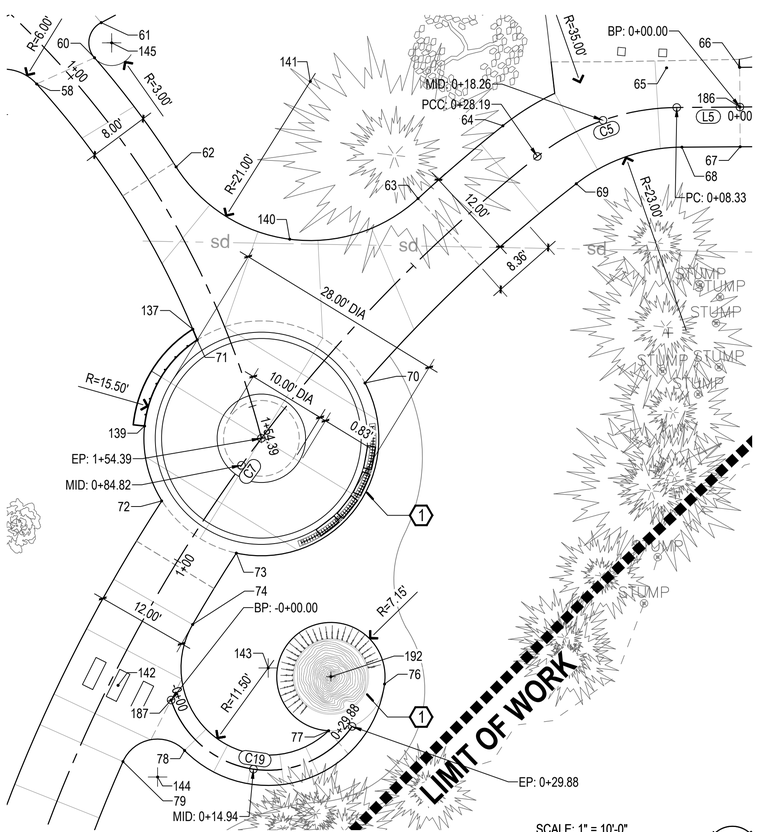

2 TOLOWA WALK ENTRY

SCALE: 1" = 10'-0"

0' 5' 10' 20' NORTH

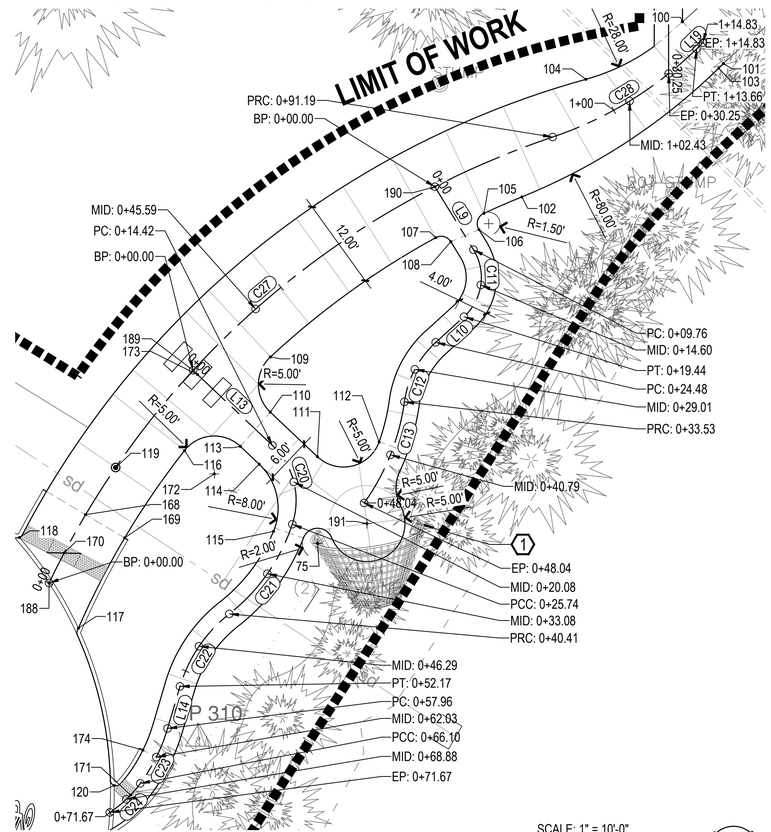

3 BURDEN BASKET INTERPRETIVE NODE

SCALE: 1" = 10'-0"

0' 5' 10' 20' NORTH

LEGEND

SYMBOL	ITEM
20'-0"	LINEAR DIMENSION
R=5'-0"	RADIUS DIMENSION
.XXX	POINT
0+00	PATH CENTERLINE AND STATION

GENERAL LAYOUT NOTES

1. VERIFY ALL DIMENSIONS AND PROJECT LAYOUT PRIOR TO ANY CONSTRUCTION OR INSTALLATION OF MATERIALS. IF LAYOUT CONFLICTS ARISE, CONTACT THE OWNER'S REPRESENTATIVE.
2. OWNER'S REPRESENTATIVE TO APPROVE FRAMEWORK FOR PATHS PRIOR TO CONTRACTOR PLACING CONCRETE.
3. CONTRACTOR SHALL EMPLOY A PROFESSIONAL LAND SURVEYOR TO STAKE PATHS AND PAVING. FINAL LAYOUT WILL BE APPROVED OF BY OWNER'S REPRESENTATIVE.
4. DIMENSIONS ARE TO FACE OF STRUCTURES, PAVING, WALLS, AND CURBS, ETC. UNLESS INDICATED OTHERWISE.
5. WRITTEN DIMENSIONS TAKE PRECEDENT OVER SCALE OF PLANS.
6. ALL CURVED WALLS AND WALKS SHALL HAVE SMOOTH, CONTINUOUS CURVES AS INDICATED.

X LAYOUT KEY NOTES

1. LOCATION OF ART AND INTERPRETIVE ELEMENTS TO BE APPROVED BY THE OWNER'S REPRESENTATIVE. FINAL SHOP DRAWINGS AND STRUCTURAL PLANS TO BE PROVIDED BY SELECTED FABRICATOR.

GREEN WORKS

LANDSCAPE ARCHITECTURE
ENVIRONMENTAL DESIGN

110 SE Main St., Suite 100
Portland, OR 97214
Ph: 503 222 5612
Fax: 503 222 2283
Email: info@greenworkspc.com

LICENSED LANDSCAPE ARCHITECT
BENJAMIN JOHNSON 6183
Signature
Renewal Date
Date
STATE OF CALIFORNIA

VERIFY SCALE: DRAWINGS ARE TO SCALE IF BAR MEASURES 1"
0" 1/2" 1"

CITY OF CRESCENT CITY CALIFORNIA 1854

Project:
Beachfront Park
Clean CA

City of Crescent City
377 J STREET
CRESCENT CITY, CA, 95531
707-464-9506
ewier@crescentcity.org

Submittal: BID SET

Sheet Title:
Layout Plan
Enlargements

© GREENWORKS, P.C.
2024, ALL RIGHTS RESERVED

THESE DRAWINGS ARE THE PROPERTY OF GREENWORKS, P.C., AND ARE NOT TO BE USED OR REPRODUCED IN ANY MANNER, EXCEPT WITH THE PRIOR WRITTEN PERMISSION OF GREENWORKS, P.C.

Date:	05/09/2025
Revisions:	
Drawn By:	SS/MM/PG
Checked By:	BJ/GM
Job No.	220065
Approved:	BJ

L5.06

G:\PROJECTS\220065.1_CRESCENT_CITY_BEACHFRONT_PARK\02_CLEAN_CA\02_PRODUCTION\01_CAD\01_PLOT_SHEETS\220065_LAYO_CCA.DWG

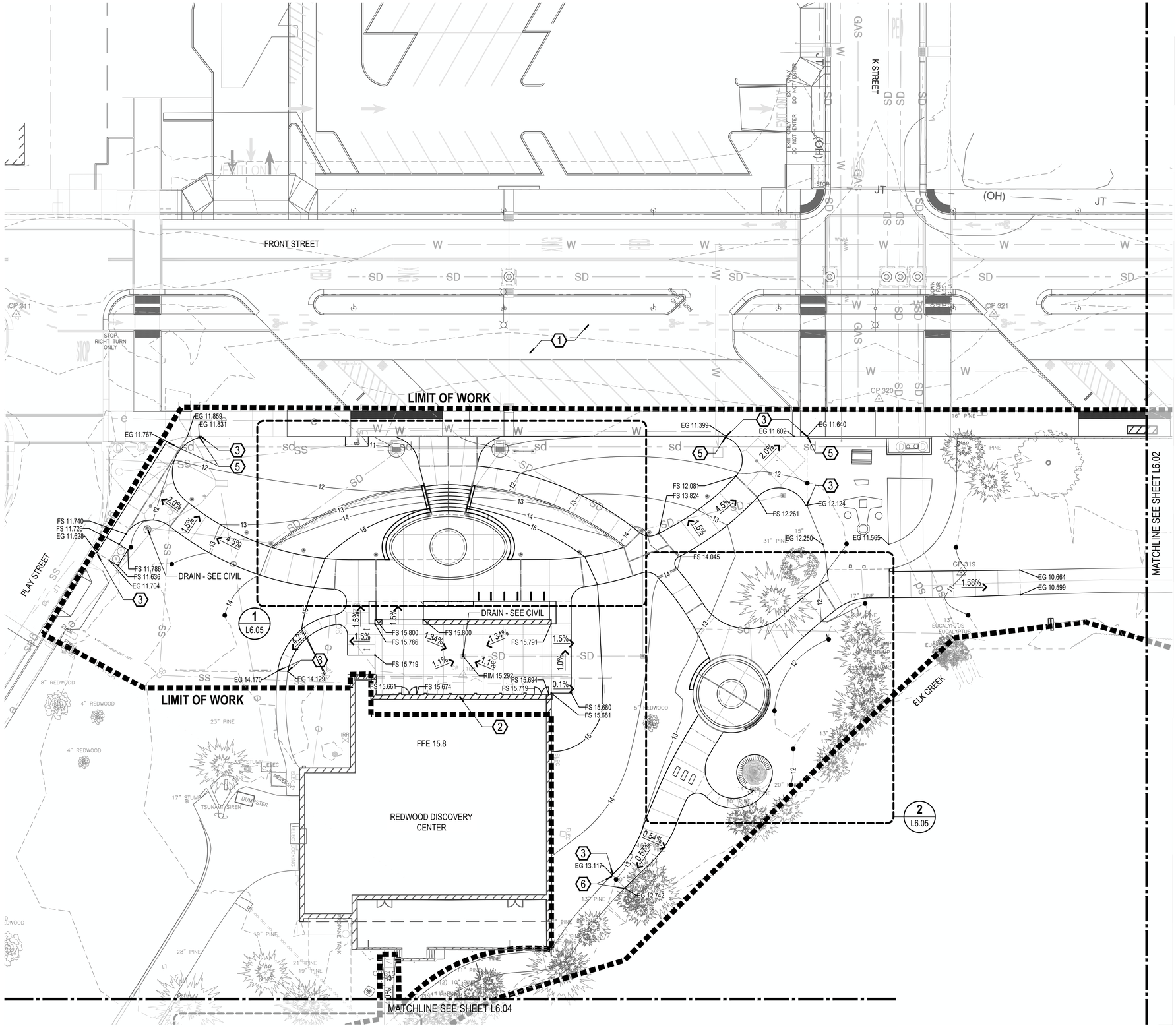

GRADING AND DRAINAGE LEGEND

SYMBOL	ITEM
205	EXISTING MAJOR CONTOUR
203	EXISTING MINOR CONTOUR
205	PROPOSED MAJOR CONTOUR
203	PROPOSED MINOR CONTOUR
	GRADE BREAK
FS XXX.XX	SPOT ELEVATION
TW XXX.XX / BW XXX.XX	SPOT ELEVATION (DOUBLE)
XX%	SURFACE SLOPE PERCENTAGE
■	AREA DRAIN - SEE CIVIL

GENERAL GRADING NOTES

1. VERIFY ALL EXISTING GRADES IN THE FIELD PRIOR TO COMMENCING WORK AND REPORT ANY DISCREPANCIES TO THE OWNER'S REPRESENTATIVE IMMEDIATELY.
2. MAXIMUM SLOPES FOR WALKWAYS AND SIDEWALKS (WITHOUT HANDRAILS) TO BE 2% (CROSS SLOPE) AND 5% (LONGITUDINAL SLOPE). MAXIMUM SLOPES FOR RAMPS SHALL NOT BE GREATER THAN 1V:12H (8.33%) AND RAMP RUNS TO HAVE A LANDING EVERY 30" RISE IN ELEVATION.
3. WHERE NEW FINISH GRADES TIE INTO EXISTING GRADES, EARTHWORK SHALL BE BLENDED SMOOTHLY WITH ROUNDED AND SEAMLESS TRANSITIONS.

GRADING KEY NOTES

1. FRONT STREET IMPROVEMENTS BY OTHERS (N.I.C).
2. SEE ARCHITECTURE FOR DISCOVERY CENTER IMPROVEMENTS.
3. PROPOSED PAVING TO BE FLUSH WITH EXISTING PAVING.
4. FINISHED GRADE AT DOOR TO BE FLUSH WITH DOOR THRESHOLD. FIELD VERIFY.
5. GRADING SUBJECT TO CHANGE BASED ON RIGHT OF WAY LIMITS AND EXISTING CONDITIONS AT TIME OF CONSTRUCTION. NOTIFY OWNER'S REPRESENTATIVE AND LANDSCAPE ARCHITECT IF EXISTING GRADING CONDITIONS IN THE FIELD DO NOT MATCH SPOT ELEVATIONS SHOWN ON PLANS.
6. CHALLENGING CROSS-GRADE CONDITION BASED ON SURVEY DATA. FINAL GRADING AND EXTENT OF PROPOSED PAVING TO BE RESOLVED IN THE FIELD. VERIFY EXISTING CONDITIONS AND NOTIFY LANDSCAPE ARCHITECT BEFORE PROCEEDING.

KEY MAP

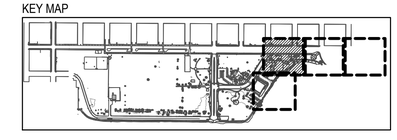

NORTH

SCALE: 1" = 20'-0"

0' 10' 20' 40'

GREEN WORKS
LANDSCAPE ARCHITECTURE
ENVIRONMENTAL DESIGN
110 SE Main St., Suite 100
Portland, OR 97214
Ph: 503 222 5612
Fax: 503 222 2283
Email: info@greenworkspc.com

LICENSED LANDSCAPE ARCHITECT
BENJAMIN JOHNSON 6183
Signature
Renewal Date
Date
STATE OF CALIFORNIA

VERIFY SCALE: DRAWINGS ARE TO SCALE IF BAR MEASURES 1"
0" 1/2" 1"

CITY OF CRESCENT CITY CALIFORNIA 1854

Project: Beachfront Park Clean CA
City of Crescent City
377 J STREET
CRESCENT CITY, CA, 95531
707-464-9506
ewier@crescentcity.org

Submittal: BID SET

Sheet Title: Grading Plan

© GREENWORKS, P.C. 2024, ALL RIGHTS RESERVED
THESE DRAWINGS ARE THE PROPERTY OF GREENWORKS, P.C., AND ARE NOT TO BE USED OR REPRODUCED IN ANY MANNER, EXCEPT WITH THE PRIOR WRITTEN PERMISSION OF GREENWORKS, P.C.

Date:	05/09/2025
Revisions:	
Drawn By:	SS/MM/PG
Checked By:	BJ/GM
Job No.	220065
Approved:	BJ

L6.01

Sheet No. 32 of 63

G:\PROJECTS\220065 | CRESCENT CITY_BEACHFRONT_PARK\02_CLEAN_CA\02_PRODUCTION\01_CAD\01_PLOT_SHEETS\220065_GRAD_CCA.DWG

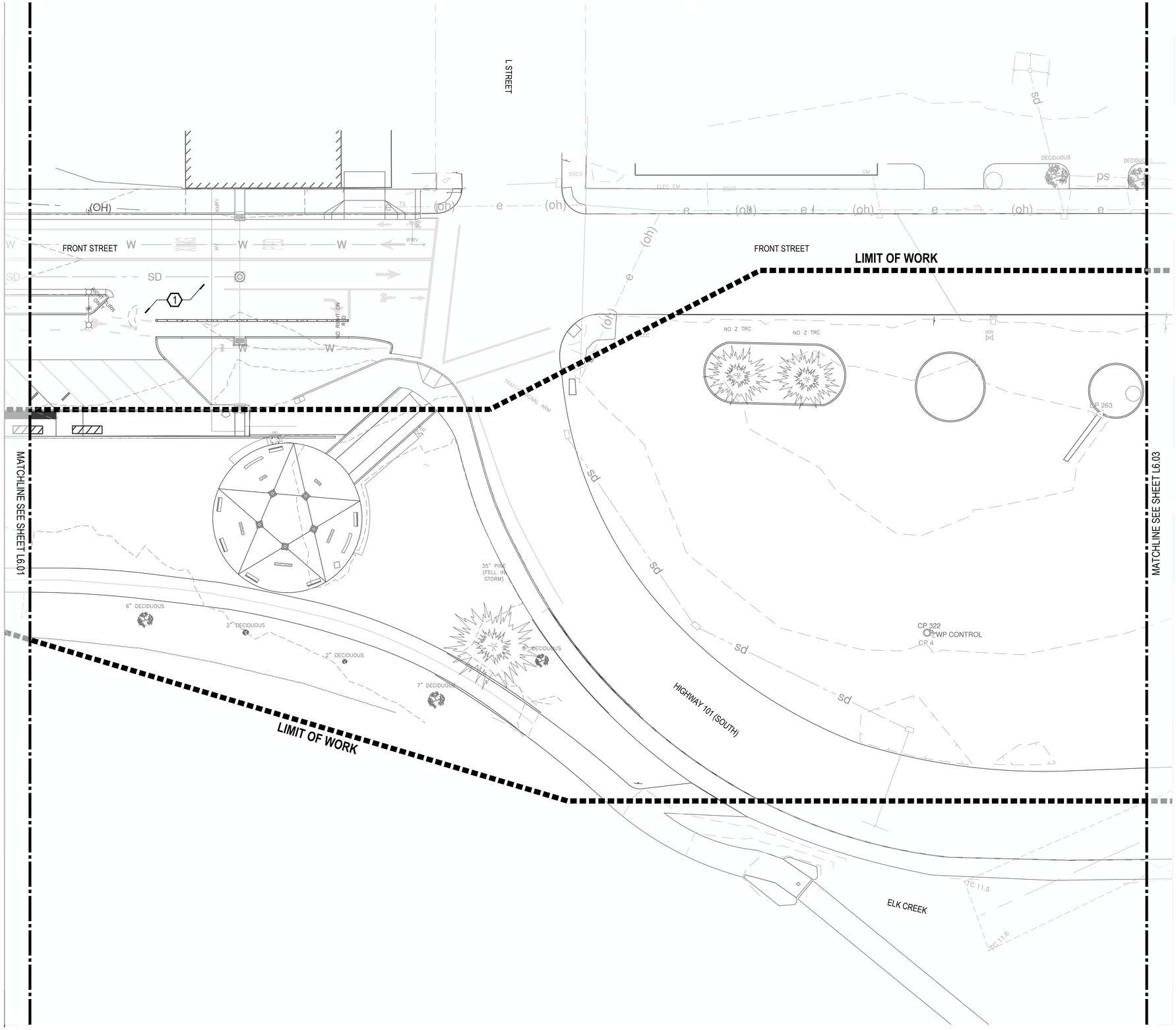

GRADING AND DRAINAGE LEGEND

SYMBOL	ITEM
205	EXISTING MAJOR CONTOUR
203	EXISTING MINOR CONTOUR
205	PROPOSED MAJOR CONTOUR
203	PROPOSED MINOR CONTOUR
	GRADE BREAK
FS XXX.XX	SPOT ELEVATION
TW XXX.XX / BW XXX.XX	SPOT ELEVATION (DOUBLE)
XX%	SURFACE SLOPE PERCENTAGE
■	AREA DRAIN - SEE CIVIL

GENERAL GRADING NOTES

1. VERIFY ALL EXISTING GRADES IN THE FIELD PRIOR TO COMMENCING WORK AND REPORT ANY DISCREPANCIES TO THE OWNER'S REPRESENTATIVE IMMEDIATELY.
2. MAXIMUM SLOPES FOR WALKWAYS AND SIDEWALKS (WITHOUT HANDRAILS) TO BE 2% (CROSS SLOPE) AND 5% (LONGITUDINAL SLOPE). MAXIMUM SLOPES FOR RAMPS SHALL NOT BE GREATER THAN 1V:12H (8.33%) AND RAMP RUNS TO HAVE A LANDING EVERY 30" RISE IN ELEVATION.
3. WHERE NEW FINISH GRADES TIE INTO EXISTING GRADES, EARTHWORK SHALL BE BLENDED SMOOTHLY WITH ROUNDED AND SEAMLESS TRANSITIONS.

GRADING KEY NOTES

1. FRONT STREET IMPROVEMENTS BY OTHERS (N.I.C).
2. SEE ARCHITECTURE FOR DISCOVERY CENTER IMPROVEMENTS.
3. PROPOSED PAVING TO BE FLUSH WITH EXISTING PAVING.
4. FINISHED GRADE AT DOOR TO BE FLUSH WITH DOOR THRESHOLD. FIELD VERIFY.
5. GRADING SUBJECT TO CHANGE BASED ON RIGHT OF WAY LIMITS AND EXISTING CONDITIONS AT TIME OF CONSTRUCTION. NOTIFY OWNER'S REPRESENTATIVE AND LANDSCAPE ARCHITECT IF EXISTING GRADING CONDITIONS IN THE FIELD DO NOT MATCH SPOT ELEVATIONS SHOWN ON PLANS.
6. CHALLENGING CROSS-GRADE CONDITION BASED ON SURVEY DATA. FINAL GRADING AND EXTENT OF PROPOSED PAVING TO BE RESOLVED IN THE FIELD. VERIFY EXISTING CONDITIONS AND NOTIFY LANDSCAPE ARCHITECT BEFORE PROCEEDING.

KEY MAP

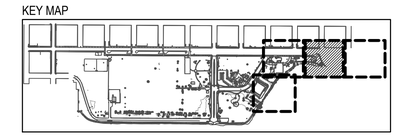

NORTH

SCALE: 1" = 20'-0"

0' 10' 20' 40'

GREEN WORKS
LANDSCAPE ARCHITECTURE
ENVIRONMENTAL DESIGN
110 SE Main St., Suite 100
Portland, OR 97214
Ph: 503 222 5612
Fax: 503 222 2283
Email: info@greenworkspc.com

LICENSED LANDSCAPE ARCHITECT
BENJAMIN JOHNSON 6192
Signature
Renewal Date
Date
STATE OF CALIFORNIA

VERIFY SCALE: DRAWINGS ARE TO SCALE IF BAR MEASURES 1"
0" 1/2" 1"

CITY OF CRESCENT CITY CALIFORNIA 1854

Project: Beachfront Park
Clean CA
City of Crescent City
377 J STREET
CRESCENT CITY, CA, 95531
707-464-9506
ewier@crescentcity.org

Submittal: BID SET

Sheet Title: Grading Plan

© GREENWORKS, P.C.
2024, ALL RIGHTS RESERVED
THESE DRAWINGS ARE THE PROPERTY OF GREENWORKS, P.C., AND ARE NOT TO BE USED OR REPRODUCED IN ANY MANNER, EXCEPT WITH THE PRIOR WRITTEN PERMISSION OF GREENWORKS, P.C.

Date:	05/09/2025
Revisions:	
Drawn By:	SS/MM/PG
Checked By:	BJ/GM
Job No.	220065
Approved:	BJ

L6.02

Sheet No. 33 of 63

G:\PROJECTS\220065.1_CRESCENT_CITY_BEACHFRONT_PARK\02_CLEAN_CA\02_PRODUCTION\01_CAD\01_PLOT_SHEETS\220065_GRAD_CCA.DWG

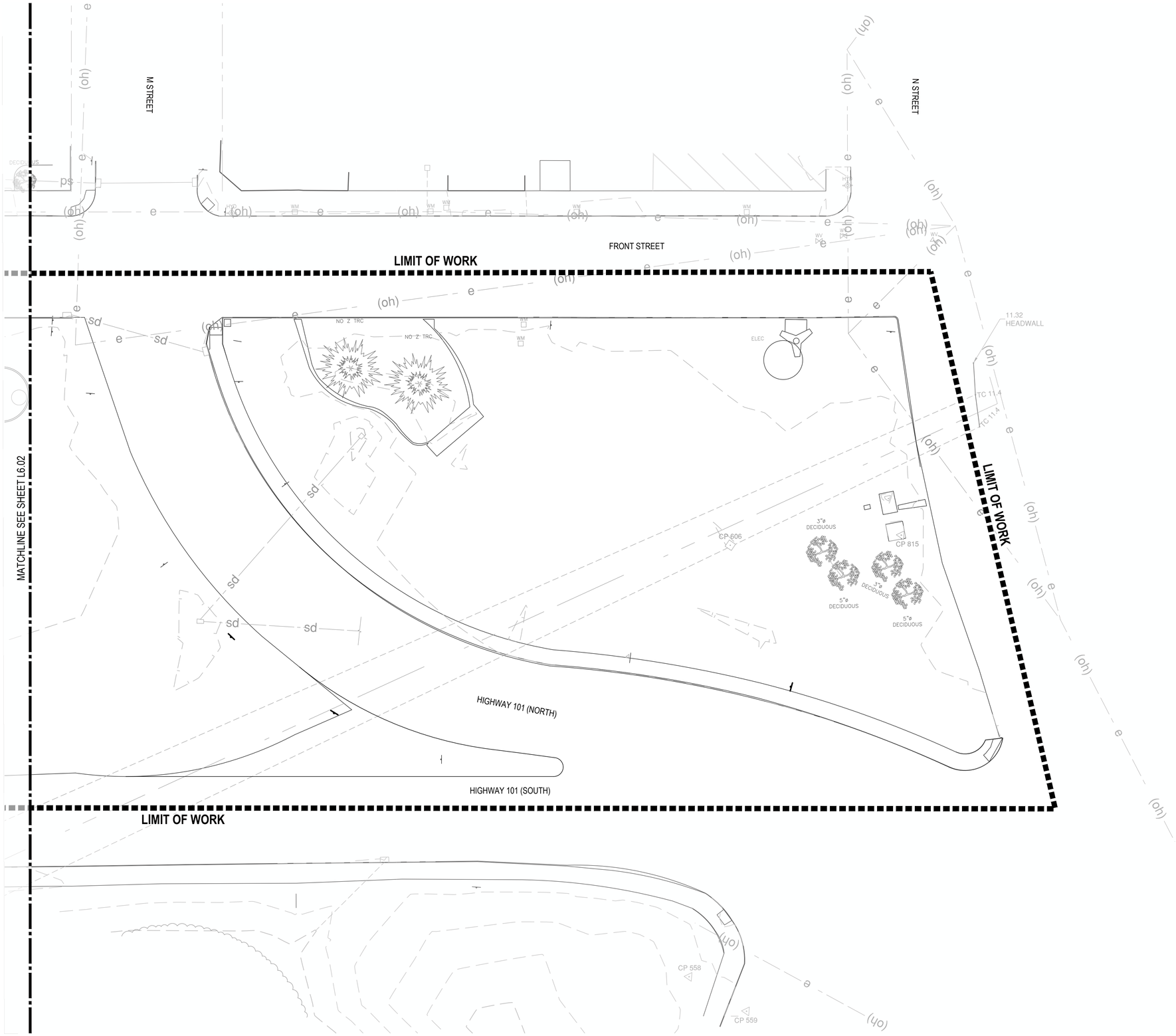

GRADING AND DRAINAGE LEGEND

SYMBOL	ITEM
205	EXISTING MAJOR CONTOUR
203	EXISTING MINOR CONTOUR
205	PROPOSED MAJOR CONTOUR
203	PROPOSED MINOR CONTOUR
	GRADE BREAK
FS XXX.XX	SPOT ELEVATION
TW XXX.XX / BW XXX.XX	SPOT ELEVATION (DOUBLE)
XX%	SURFACE SLOPE PERCENTAGE
	AREA DRAIN - SEE CIVIL

GENERAL GRADING NOTES

1. VERIFY ALL EXISTING GRADES IN THE FIELD PRIOR TO COMMENCING WORK AND REPORT ANY DISCREPANCIES TO THE OWNER'S REPRESENTATIVE IMMEDIATELY.
2. MAXIMUM SLOPES FOR WALKWAYS AND SIDEWALKS (WITHOUT HANDRAILS) TO BE 2% (CROSS SLOPE) AND 5% (LONGITUDINAL SLOPE). MAXIMUM SLOPES FOR RAMPS SHALL NOT BE GREATER THAN 1V:12H (8.33%) AND RAMP RUNS TO HAVE A LANDING EVERY 30" RISE IN ELEVATION.
3. WHERE NEW FINISH GRADES TIE INTO EXISTING GRADES, EARTHWORK SHALL BE BLENDED SMOOTHLY WITH ROUNDED AND SEAMLESS TRANSITIONS.

GRADING KEY NOTES

1. FRONT STREET IMPROVEMENTS BY OTHERS (N.I.C).
2. SEE ARCHITECTURE FOR DISCOVERY CENTER IMPROVEMENTS.
3. PROPOSED PAVING TO BE FLUSH WITH EXISTING PAVING.
4. FINISHED GRADE AT DOOR TO BE FLUSH WITH DOOR THRESHOLD. FIELD VERIFY.
5. GRADING SUBJECT TO CHANGE BASED ON RIGHT OF WAY LIMITS AND EXISTING CONDITIONS AT TIME OF CONSTRUCTION. NOTIFY OWNER'S REPRESENTATIVE AND LANDSCAPE ARCHITECT IF EXISTING GRADING CONDITIONS IN THE FIELD DO NOT MATCH SPOT ELEVATIONS SHOWN ON PLANS.
6. CHALLENGING CROSS-GRADE CONDITION BASED ON SURVEY DATA. FINAL GRADING AND EXTENT OF PROPOSED PAVING TO BE RESOLVED IN THE FIELD. VERIFY EXISTING CONDITIONS AND NOTIFY LANDSCAPE ARCHITECT BEFORE PROCEEDING.

KEY MAP

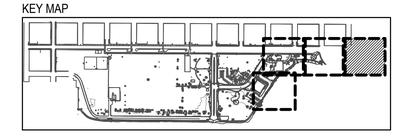

NORTH

SCALE: 1" = 20'-0"

0' 10' 20' 40'

GREEN WORKS
LANDSCAPE ARCHITECTURE
ENVIRONMENTAL DESIGN
110 SE Main St., Suite 100
Portland, OR 97214
Ph: 503 222 5612
Fax: 503 222 2283
Email: info@greenworkspc.com

LICENSED LANDSCAPE ARCHITECT
BENJAMIN JOHNSON 6183
Signature
Renewal Date
Date
STATE OF CALIFORNIA

VERIFY SCALE: DRAWINGS ARE TO SCALE IF BAR MEASURES 1"
0" 1/2" 1"

CITY OF CRESCENT CITY CALIFORNIA 1854

Project:
Beachfront Park Clean CA

City of Crescent City
377 J STREET
CRESCENT CITY, CA, 95531
707-464-9506
ewier@crescentcity.org

Submittal: BID SET

Sheet Title:
Grading Plan

© GREENWORKS, P.C. 2024, ALL RIGHTS RESERVED

THESE DRAWINGS ARE THE PROPERTY OF GREENWORKS, P.C., AND ARE NOT TO BE USED OR REPRODUCED IN ANY MANNER, EXCEPT WITH THE PRIOR WRITTEN PERMISSION OF GREENWORKS, P.C.

Date:	05/09/2025
Revisions:	
Drawn By:	SS/MM/PG
Checked By:	BJ/GM
Job No.	220065
Approved:	BJ

L6.03

G:\PROJECTS\220065.1_CRESCENT_CITY_BEACHFRONT_PARK\02_CLEAN_CA\02_PRODUCTION\01_CAD\01_PLOT_SHEETS\220065_GRAD_CCA.DWG

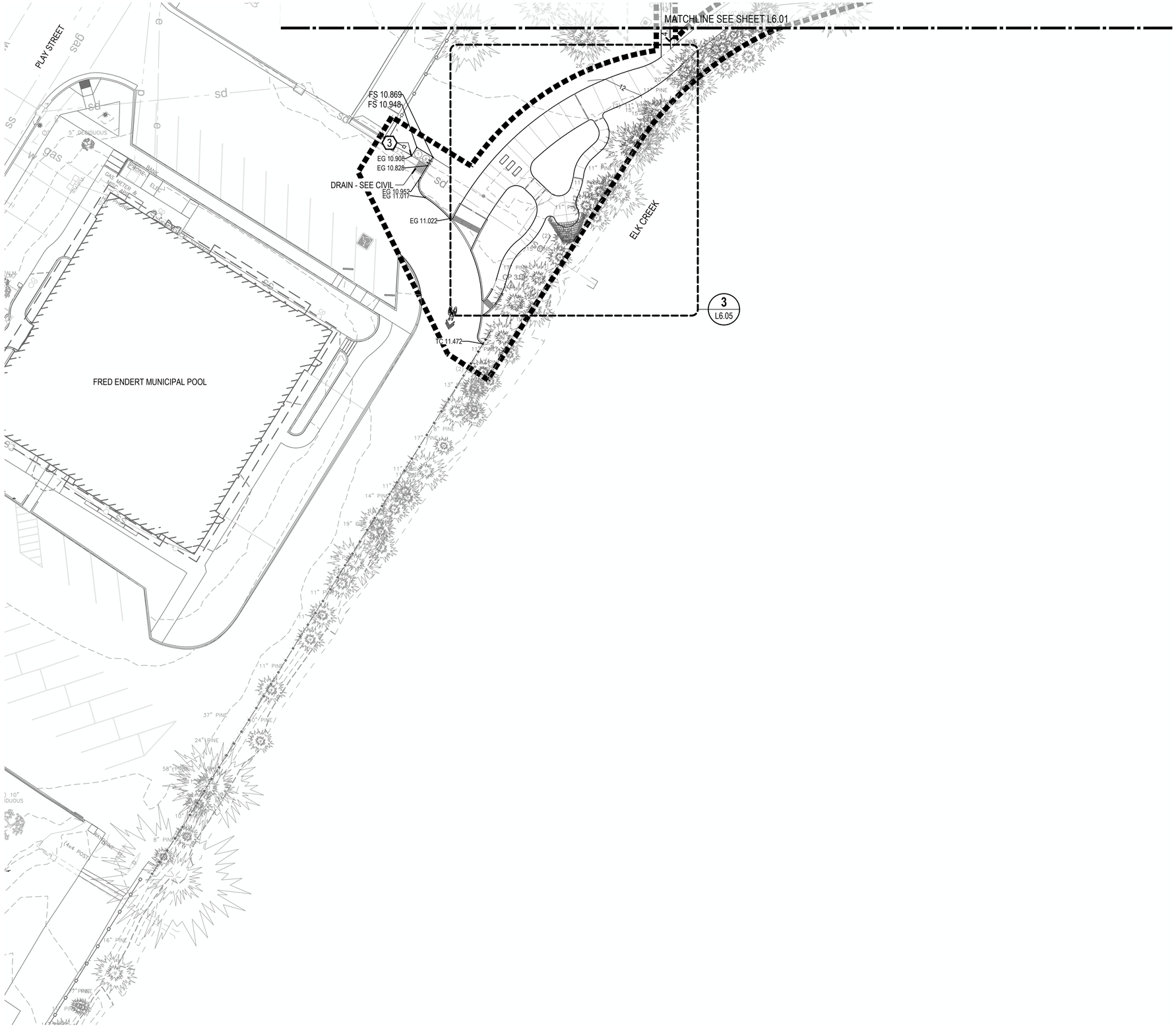

GRADING AND DRAINAGE LEGEND

SYMBOL	ITEM
205	EXISTING MAJOR CONTOUR
203	EXISTING MINOR CONTOUR
205	PROPOSED MAJOR CONTOUR
203	PROPOSED MINOR CONTOUR
	GRADE BREAK
FS XXX.XX	SPOT ELEVATION
TW XXX.XX / BW XXX.XX	SPOT ELEVATION (DOUBLE)
XX%	SURFACE SLOPE PERCENTAGE
	AREA DRAIN - SEE CIVIL

GENERAL GRADING NOTES

1. VERIFY ALL EXISTING GRADES IN THE FIELD PRIOR TO COMMENCING WORK AND REPORT ANY DISCREPANCIES TO THE OWNER'S REPRESENTATIVE IMMEDIATELY.
2. MAXIMUM SLOPES FOR WALKWAYS AND SIDEWALKS (WITHOUT HANDRAILS) TO BE 2% (CROSS SLOPE) AND 5% (LONGITUDINAL SLOPE). MAXIMUM SLOPES FOR RAMPS SHALL NOT BE GREATER THAN 1V:12H (8.33%) AND RAMP RUNS TO HAVE A LANDING EVERY 30" RISE IN ELEVATION.
3. WHERE NEW FINISH GRADES TIE INTO EXISTING GRADES, EARTHWORK SHALL BE BLENDED SMOOTHLY WITH ROUNDED AND SEAMLESS TRANSITIONS.

GRADING KEY NOTES

1. FRONT STREET IMPROVEMENTS BY OTHERS (N.I.C).
2. SEE ARCHITECTURE FOR DISCOVERY CENTER IMPROVEMENTS.
3. PROPOSED PAVING TO BE FLUSH WITH EXISTING PAVING.
4. FINISHED GRADE AT DOOR TO BE FLUSH WITH DOOR THRESHOLD. FIELD VERIFY.
5. GRADING SUBJECT TO CHANGE BASED ON RIGHT OF WAY LIMITS AND EXISTING CONDITIONS AT TIME OF CONSTRUCTION. NOTIFY OWNER'S REPRESENTATIVE AND LANDSCAPE ARCHITECT IF EXISTING GRADING CONDITIONS IN THE FIELD DO NOT MATCH SPOT ELEVATIONS SHOWN ON PLANS.
6. CHALLENGING CROSS-GRADE CONDITION BASED ON SURVEY DATA. FINAL GRADING AND EXTENT OF PROPOSED PAVING TO BE RESOLVED IN THE FIELD. VERIFY EXISTING CONDITIONS AND NOTIFY LANDSCAPE ARCHITECT BEFORE PROCEEDING.

KEY MAP

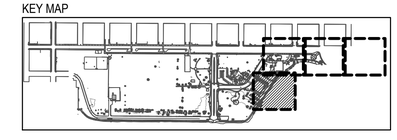

NORTH

SCALE: 1" = 20'-0"

0' 10' 20' 40'

GREEN WORKS
LANDSCAPE ARCHITECTURE
ENVIRONMENTAL DESIGN
110 SE Main St., Suite 100
Portland, OR 97214
Ph: 503 222 5612
Fax: 503 222 2283
Email: info@greenworkspc.com

LICENSED LANDSCAPE ARCHITECT
BENJAMIN JOHNSON 6183
Signature
Renewal Date
Date
STATE OF CALIFORNIA

VERIFY SCALE: DRAWINGS ARE TO SCALE IF BAR MEASURES 1"
0" 1/2" 1"

CITY OF CRESCENT CITY CALIFORNIA 1854

Project: Beachfront Park Clean CA
City of Crescent City
377 J STREET
CRESCENT CITY, CA, 95531
707-464-9506
ewier@crescentcity.org

Submittal: BID SET

Sheet Title: Grading Plan

© GREENWORKS, P.C. 2024, ALL RIGHTS RESERVED
THESE DRAWINGS ARE THE PROPERTY OF GREENWORKS, P.C., AND ARE NOT TO BE USED OR REPRODUCED IN ANY MANNER, EXCEPT WITH THE PRIOR WRITTEN PERMISSION OF GREENWORKS, P.C.

Date:	05/09/2025
Revisions:	
Drawn By:	SS/MM/PG
Checked By:	BJ/GM
Job No.	220065
Approved:	BJ

L6.04

Sheet No. 35 of 63

G:\PROJECTS\220065.1_CRESCENT_CITY_BEACHFRONT_PARK\02_CLEAN_CA\02_PRODUCTION\01_CAD\01_PLOT_SHEETS\220065_GRAD_CCA.DWG

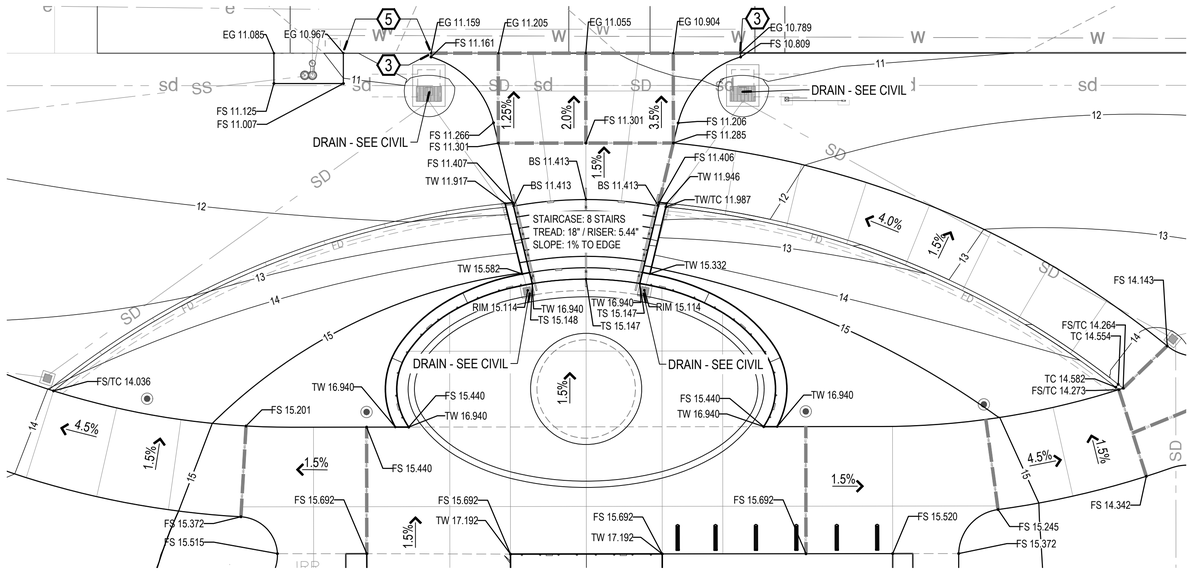

1 DISCOVERY CENTER ENTRY

SCALE: 1" = 10'-0"

0' 5' 10' 20' NORTH

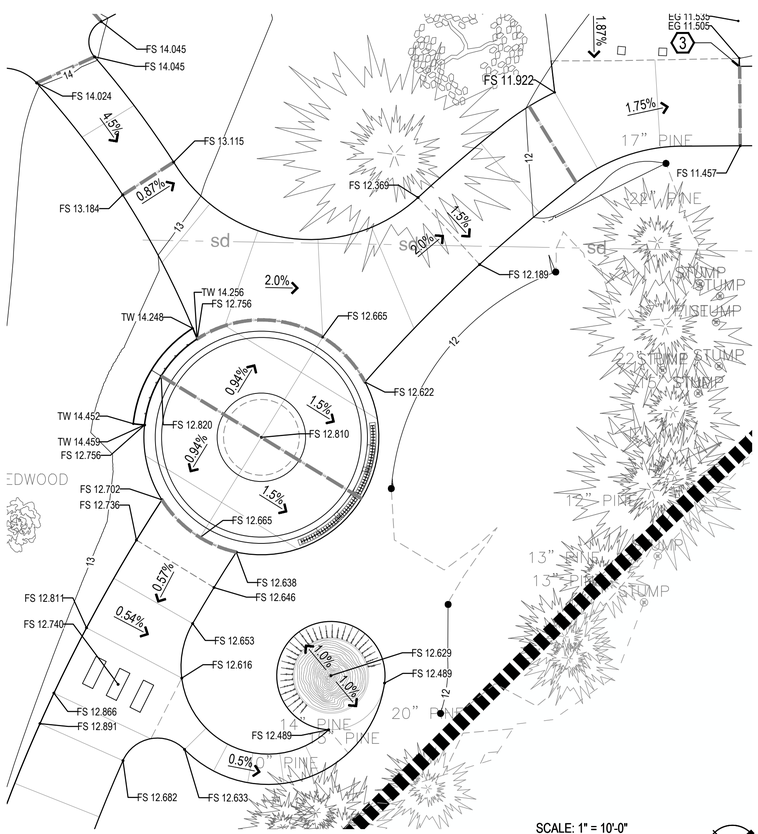

2 TOLOWA WALK ENTRY

SCALE: 1" = 10'-0"

0' 5' 10' 20' NORTH

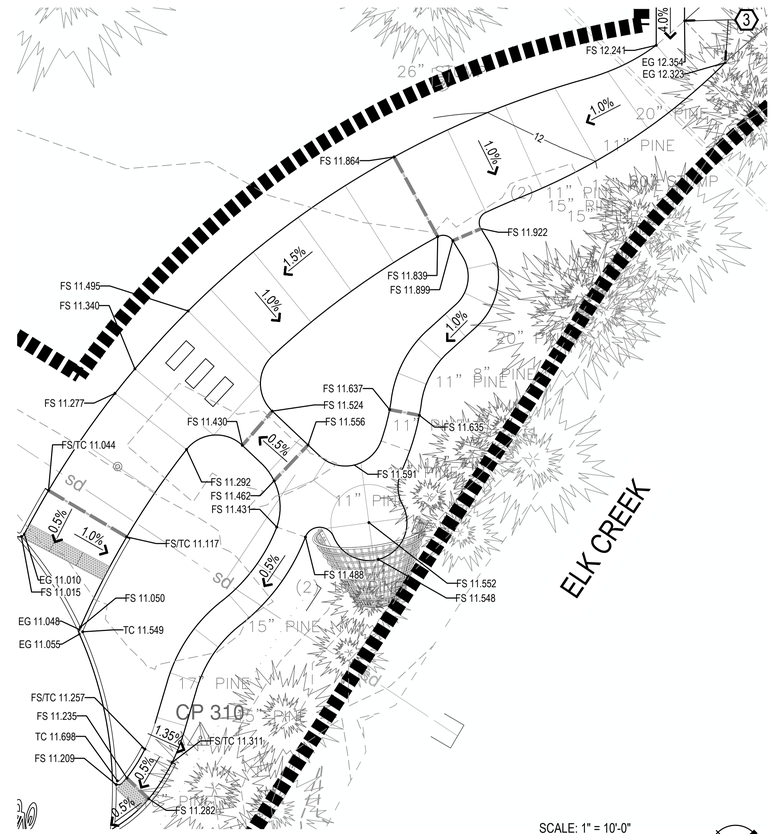

3 BURDEN BASKET INTERPRETIVE NODE

SCALE: 1" = 10'-0"

0' 5' 10' 20' NORTH

GRADING AND DRAINAGE LEGEND

SYMBOL	ITEM
205	EXISTING MAJOR CONTOUR
203	EXISTING MINOR CONTOUR
205	PROPOSED MAJOR CONTOUR
203	PROPOSED MINOR CONTOUR
	GRADE BREAK
FS XXX.XX	SPOT ELEVATION
TW XXX.XX / BW XXX.XX	SPOT ELEVATION (DOUBLE)
XX%	SURFACE SLOPE PERCENTAGE
■	AREA DRAIN - SEE CIVIL

GENERAL GRADING NOTES

1. VERIFY ALL EXISTING GRADES IN THE FIELD PRIOR TO COMMENCING WORK AND REPORT ANY DISCREPANCIES TO THE OWNER'S REPRESENTATIVE IMMEDIATELY.
2. MAXIMUM SLOPES FOR WALKWAYS AND SIDEWALKS (WITHOUT HANDRAILS) TO BE 2% (CROSS SLOPE) AND 5% (LONGITUDINAL SLOPE). MAXIMUM SLOPES FOR RAMPS SHALL NOT BE GREATER THAN 1V:12H (8.33%) AND RAMP RUNS TO HAVE A LANDING EVERY 30" RISE IN ELEVATION.
3. WHERE NEW FINISH GRADES TIE INTO EXISTING GRADES, EARTHWORK SHALL BE BLENDED SMOOTHLY WITH ROUNDED AND SEAMLESS TRANSITIONS.

GRADING KEY NOTES

1. FRONT STREET IMPROVEMENTS BY OTHERS (N.I.C).
2. SEE ARCHITECTURE FOR DISCOVERY CENTER IMPROVEMENTS.
3. PROPOSED PAVING TO BE FLUSH WITH EXISTING PAVING.
4. FINISHED GRADE AT DOOR TO BE FLUSH WITH DOOR THRESHOLD. FIELD VERIFY.
5. GRADING SUBJECT TO CHANGE BASED ON RIGHT OF WAY LIMITS AND EXISTING CONDITIONS AT TIME OF CONSTRUCTION. NOTIFY OWNER'S REPRESENTATIVE AND LANDSCAPE ARCHITECT IF EXISTING GRADING CONDITIONS IN THE FIELD DO NOT MATCH SPOT ELEVATIONS SHOWN ON PLANS.
6. CHALLENGING CROSS-GRADE CONDITION BASED ON SURVEY DATA. FINAL GRADING AND EXTENT OF PROPOSED PAVING TO BE RESOLVED IN THE FIELD. VERIFY EXISTING CONDITIONS AND NOTIFY LANDSCAPE ARCHITECT BEFORE PROCEEDING.

GREEN WORKS
LANDSCAPE ARCHITECTURE
ENVIRONMENTAL DESIGN
110 SE Main St., Suite 100
Portland, OR 97214
Ph: 503 222 5612
Fax: 503 222 2283
Email: info@greenworkspc.com

LICENSED LANDSCAPE ARCHITECT
BENJAMIN JOHNSON 6363
Signature
Renewal Date
Date
STATE OF CALIFORNIA

VERIFY SCALE: DRAWINGS ARE TO SCALE IF BAR MEASURES 1"
0" 1/2" 1"

CITY OF CRESCENT CITY CALIFORNIA 1854

Project: Beachfront Park
Clean CA
City of Crescent City
377 J STREET
CRESCENT CITY, CA, 95531
707-464-9506
ewier@crescentcity.org

Submittal: BID SET

Sheet Title: Grading Plan Enlargement

© GREENWORKS, P.C. 2024, ALL RIGHTS RESERVED
THESE DRAWINGS ARE THE PROPERTY OF GREENWORKS, P.C., AND ARE NOT TO BE USED OR REPRODUCED IN ANY MANNER, EXCEPT WITH THE PRIOR WRITTEN PERMISSION OF GREENWORKS, P.C.

Date:	05/09/2025
Revisions:	
Drawn By:	SS/MM/PG
Checked By:	BJ/GM
Job No.	220065
Approved:	BJ

L6.05

G:\PROJECTS\220065 1_CRESCENT_CITY_BEACHFRONT_PARK\02_CLEAN_CA\02_PRODUCTION\01_CAD\01_PLOT_SHEETS\220065_GRAD_CCA.DWG

IRRIGATION SCHEDULE

SYMBOL	MANUFACTURER/MODEL/DESCRIPTION	QTY
	ZONE VALVE: RAIN BIRD PEB 1" PLASTIC INDUSTRIAL VALVE.	3
	ZONE VALVE: RAIN BIRD PEB 1-1/2" PLASTIC INDUSTRIAL VALVE.	1
	ZONE VALVE: RAIN BIRD PEB 2" PLASTIC INDUSTRIAL VALVE.	1
	ISOLATION VALVE: APOLLO VALVES 77C10801 BALL VALVE, INLET SIZE 2IN., BRONZE B584 BODY, BLOW-OUT PROOF STEM DESIGN, MULTI-FILL PTFE SEATS & SEALS.	1
MV	MASTER VALVE: RAIN BIRD PEB 2" PLASTIC INDUSTRIAL VALVE. SET TO NORMALLY CLOSED.	1
BF	DOUBLE CHECK VALVE ASSEMBLY: ZURN 350XL 2" W/ EZSWAP INSERT.	1
C	CONTROLLER: RAIN BIRD ESPLXME2-LXMM-LXMMPED W/ (1) ESPLXMSM12, 24 STATION TOTAL, TRADITIONALLY WIRED, INDOOR / OUTDOOR PLASTIC PEDESTAL MOUNTED ENCLOSURE.	1
FS	FLOW SENSOR: RAIN BIRD FS-200-P , 2IN. PLASTIC PVC MODEL.	1
M	WATER METER 2" WATER SERVICE LINE IS APPROXIMATE - REQUIRES SURVEY PRIOR TO INSTALLING METER.	1
	IRRIGATION LATERAL LINE: PVC CLASS 200 SDR 21 1"	2,586 LF
	IRRIGATION LATERAL LINE: PVC CLASS 200 SDR 21 1 1/2"	263.1 LF
	IRRIGATION LATERAL LINE: PVC CLASS 200 SDR 21 2"	14.2 LF
	IRRIGATION MAINLINE: PVC SCHEDULE 40 2"	446.1 LF
	PIPE SLEEVE: PVC SCHEDULE 40 2"	194.5 LF
	PIPE SLEEVE: PVC SCHEDULE 40 4"	74.8 LF

SYMBOL	MANUFACTURER/MODEL/DESCRIPTION	QTY	PSI
T	HUNTER MP CORNER ON RAINBIRD 1806P45 SHRUB ROTATOR, POP-UP WITH FACTORY INSTALLED CHECK VALVE, PRESSURE REGULATED TO 45 PSI, MP ROTATOR NOZZLE. T=TURQUOISE ADJ ARC 45-105.	12	45
I S R LST SST RST	HUNTER MP STRIP ON RAINBIRD 1806P45 SHRUB ROTATOR, 6IN. POP-UP WITH FACTORY INSTALLED CHECK VALVE, PRESSURE REGULATED TO 45 PSI, MP ROTATOR NOZZLE. LST=IVORY LEFT STRIP, SST=BROWN SIDE STRIP, RST=COPPER RIGHT STRIP.	4	45
M L O	HUNTER MP1000 ON RAINBIRD 1806P45 SHRUB ROTATOR, 6IN. POP-UP WITH CHECK VALVE, PRESSURE REGULATED TO 45 PSI, MP ROTATOR NOZZLE. M=MAROON ADJ ARC 90 TO 210, L=LIGHT BLUE 210 TO 270 ARC, O=OLIVE 360 ARC.	29	45
K G R	HUNTER MP2000 ON RAINBIRD 1806P45 SHRUB ROTATOR, 6IN. POP-UP WITH FACTORY INSTALLED CHECK VALVE, PRESSURE REGULATED TO 45 PSI, MP ROTATOR NOZZLE. K=BLACK ADJ ARC 90-210, G=GREEN ADJ ARC 210-270, R=RED 360 ARC.	42	45
B Y A	HUNTER MP3000 ON RAINBIRD 1806P45 SHRUB ROTATOR, 6IN. POP-UP WITH FACTORY INSTALLED CHECK VALVE, PRESSURE REGULATED TO 45 PSI, MP ROTATOR NOZZLE. B=BLUE ADJ ARC 90-210, Y=YELLOW ADJ ARC 210-270, A=GRAY 360 ARC.	15	45
LB	HUNTER MP3500 ON RAINBIRD 1806P45 SHRUB ROTATOR, 6IN. POP-UP WITH FACTORY INSTALLED CHECK VALVE, PRESSURE REGULATED TO 45 PSI, MP ROTATOR NOZZLE. LB=LIGHT BROWN, ADJUSTABLE ARC, 90-210.	2	45
800 A 800 F	HUNTER MP800SR ON RAINBIRD 1806P45 SHRUB ROTATOR, 6IN. POP-UP WITH CHECK VALVE, PRESSURE REGULATED TO 45 PSI, MP ROTATOR NOZZLE ADJ=ORANGE AND GRAY (ARC 90-210), 360=LIME GREEN AND GRAY (ARC 360)	74	45

CONTROL VALVE TARGET

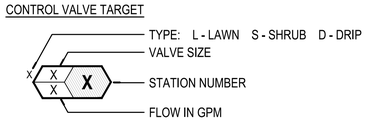

GENERAL IRRIGATION NOTES

1. CALL UTILITIES TO LOCATE EXISTING SERVICES PRIOR TO EXCAVATION.
2. CONTRACTOR TO VERIFY EXISTING ZONE COUNT PRIOR TO STARTING CONSTRUCTION.
3. SYSTEM OPERATION AND DESIGN IS BASED ON 70 PSI OF PRESSURE AND 65 GPM AT THE POINT OF CONNECTION. VERIFY THE DESIGN PRESSURE AND VOLUME BEFORE INSTALLATION AND NOTIFY OWNER'S REPRESENTATIVE IF THERE IS A DISCREPANCY.
4. REFERENCE PLANTING PLAN(S) PRIOR TO INSTALLATION OF VALVES. LOCATE VALVES IN PLANTING BEDS WHEREVER POSSIBLE. ADJUST VALVE LOCATIONS TO ELIMINATE CONFLICT WITH PROPOSED PLANTINGS AND PLANTING PATTERNS.
5. VALVE LOCATIONS TO BE STAKED AND APPROVED BY THE OWNER'S REPRESENTATIVE PRIOR TO INSTALLATION OF NEW IRRIGATION SYSTEM.
6. VERIFY THE DIMENSIONS AND LAYOUT OF ALL NEW PLANTING AND SEEDING AREAS ON SITE BEFORE STARTING WORK AND IMMEDIATELY NOTIFY OWNER'S REPRESENTATIVE OF ANY DEVIATIONS FROM PLAN.
7. STAKE PROPOSED TREE LOCATIONS AND OBTAIN APPROVAL BY THE OWNER'S REPRESENTATIVE PRIOR TO INSTALLATION OF NEW IRRIGATION SYSTEM.
8. INSTALL QUICK COUPLING VALVES A MINIMUM OF 200' ALONG MAINLINE AND AS SHOWN ON PLANS AND DETAILS.
9. INSTALL IRRIGATION CONTROLLER(S) AT THE LOCATION(S) SHOWN ON THE DRAWINGS AND ON THE PEDESTAL PER THE MANUFACTURER'S RECOMMENDATIONS. VERIFY THE LOCATION WITH OWNER'S REPRESENTATIVE PRIOR TO INSTALLATION. EXTEND CONTROL WIRE CONDUIT FROM CONTROLLER AND DAYLIGHT SIX INCHES INTO PLANTING BED FOR INSTALLATION OF 2-WIRE PATH.
10. ALL CROSS-CONNECTIONS (BACKFLOW PREVENTION DEVICES) SHALL BE LOCATED A MINIMUM OF 5'-0" AWAY FROM CURBS OR PAVING WHEREVER POSSIBLE.
11. MAIN AND LATERAL LINES MAY BE SHOWN DIAGRAMMATICALLY FOR CLARITY. MAINLINE AND LATERAL LINES SHOWN IN PAVED AREAS SHALL BE PLACED IN ADJACENT PLANTING BEDS UNLESS SPECIFICALLY SHOWN AS PASSING UNDER PAVING IN SLEEVING (SEE SCHEDULE FOR SLEEVE SYMBOL). OBTAIN THE OWNER'S REPRESENTATIVE'S APPROVAL BEFORE MAKING CHANGES IN ROUTING OF PIPE OR LOCATION OF VALVES.
12. COORDINATE AND PROVIDE AN APPROPRIATE POWER SUPPLY TO THE IRRIGATION CONTROLLER LOCATION.

GREEN WORKS
LANDSCAPE ARCHITECTURE
ENVIRONMENTAL DESIGN
110 SE Main St., Suite 100
Portland, OR 97214
Ph: 503.222.5612
Fax: 503.222.2283
Email: info@greenworkspc.com

LICENSED LANDSCAPE ARCHITECT
BENJAMIN JOHNSON 6493
Signature
Renewal Date
Date
STATE OF CALIFORNIA

VERIFY SCALE: DRAWINGS ARE TO SCALE IF BAR MEASURES 1"
0" 1/2" 1"

CITY OF CRESCENT CITY
1854
CALIFORNIA

Project:
Beachfront Park
Clean CA
City of Crescent City
377 J STREET
CRESCENT CITY, CA, 95531
707-464-9506
ewier@crescentcity.org

Submittal: BID SET

Sheet Title:
Irrigation Notes And Legend

© GREENWORKS, P.C. 2024, ALL RIGHTS RESERVED
THESE DRAWINGS ARE THE PROPERTY OF GREENWORKS, P.C., AND ARE NOT TO BE USED OR REPRODUCED IN ANY MANNER, EXCEPT WITH THE PRIOR WRITTEN PERMISSION OF GREENWORKS, P.C.

Date:	05/09/2025
Revisions:	
Drawn By:	SS/MM/PG
Checked By:	BJ/GM
Job No.	220065
Approved:	BJ

L7.00

Sheet No. 37 of 63

G:\PROJECTS\220065.1_CRESCENT_CITY_BEACHFRONT_PARK\02_CLEAN_CA\02_PRODUCTION\01_CAD\01_PLOT_SHEETS\220065_IRRG_CCA.DWG

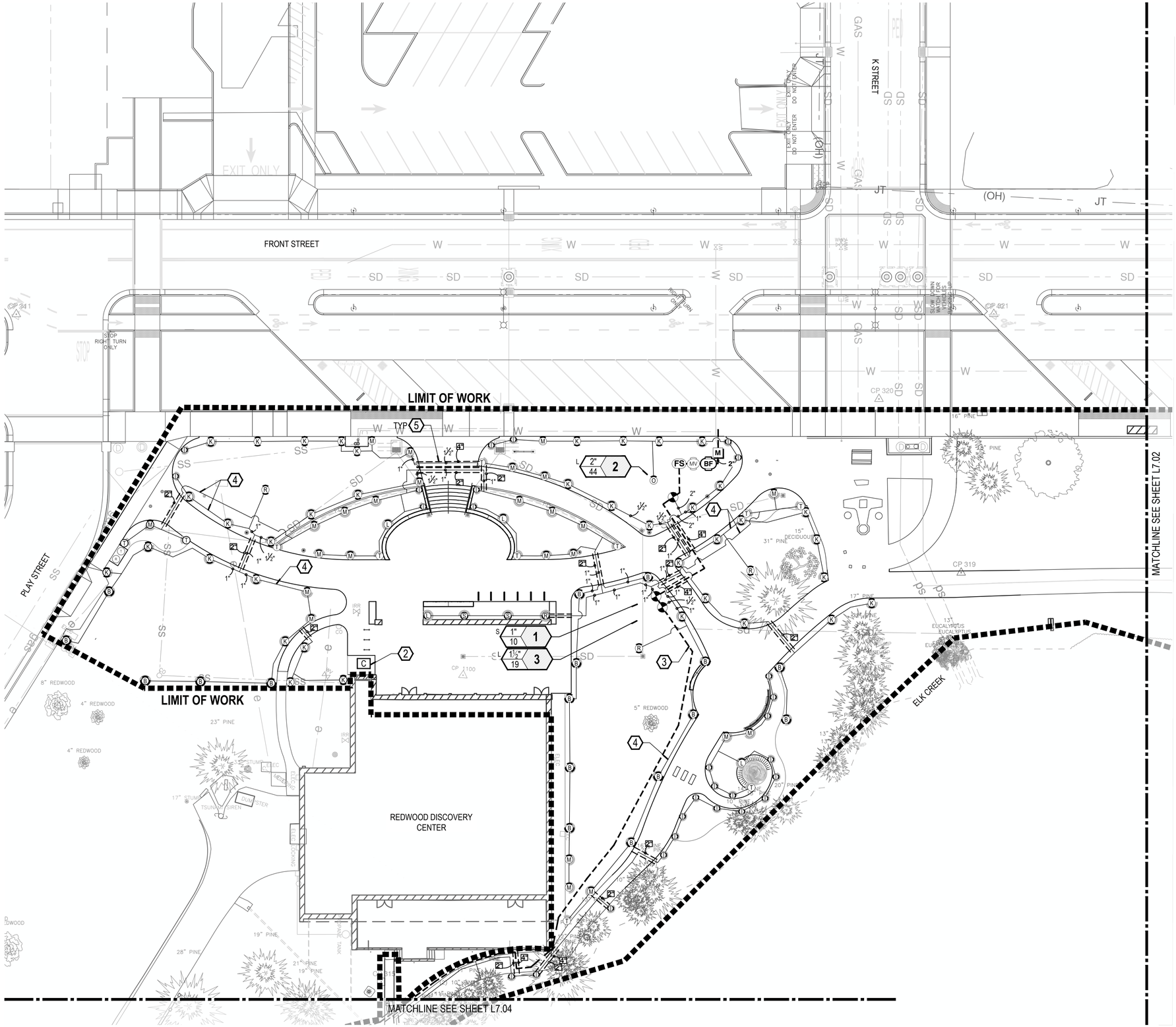

IRRIGATION LEGEND

SYMBOL	ITEM
	IRRIGATION MAINLINE: PVC SCHEDULE 40
	IRRIGATION LATERAL LINE: PVC CLASS 200 SDR 21
	PIPE SLEEVE: PVC SCHEDULE 40
	ZONE CONTROL WIRE PATH
	IRRIGATION HEAD SPRAY PATTERN

IRRIGATION KEY NOTES

1. IRRIGATION POINT-OF-CONNECTION - TAP EXISTING MAINLINE SERVICING DOGTOWN AND ADJACENT LAWN AREAS.
2. EXISTING ZONE CONTROL WIRES SHALL BE PULLED TO PROPOSED PEDESTAL LOCATION FOR RECONNECTION.
3. MAINLINE SHOWN DIAGRAMMATICALLY - LOCATE PARALLEL TO PAVING IN ADJACENT PLANTING BED.
4. LATERAL LINE SHOWN DIAGRAMMATICALLY - LOCATE PARALLEL TO PAVING IN ADJACENT PLANTING BED.
5. IRRIGATION SLEEVE SHOWN WHERE CROSSINGS ARE INTENDED. TYPICAL OF ALL PIPE AND WIRE SLEEVES. GROUP LATERALS IN COMMON SLEEVE.
6. ZONE WIRE PATH SHOWN DIAGRAMMATICALLY - LOCATE PARALLEL TO PAVING IN ADJACENT PLANTING BED.
7. EXISTING ZONE CONTROL VALVE TO REMAIN.
8. EXISTING ZONE CONTROL WIRE PATH.
9. EXISTING MAINLINE.
10. EXISTING WATER SERVICE LINE.
11. EXISTING ROTOR HEAD TO BE REMOVED AND RELOCATED OR SALVAGED.
12. RELOCATED ROTOR HEAD AND LATERAL LINE EXTENSION.
13. TEE INTO EXISTING CONTROL WIRE PATH. EXTEND WIRES AS NEEDED TO EXISTING CONTROLLER.
14. RELOCATE VALVE OUT OF PROPOSED PAVING TO THE NEAREST LANDSCAPE AREA AND INSTALL MAINLINE STUBS AS NECESSARY.
15. EXISTING ROTOR HEADS AND LATERALS
16. EXISTING ZONE CONTROL WIRES SHALL BE PULLED TO THE PROPOSED PEDESTAL LOCATION FOR RECONNECTION.
17. INSTALL LATERAL AND HEADS TO TEMPORARILY SERVICE THE ESTABLISHMENT OF THE GATEWAY LANDSCAPE. (ADD FLOW = +/- 1.88 GPM)

IRRIGATION SHEET NOTES

1. SEE SHEET L7.00 FOR IRRIGATION NOTES AND LEGEND.
2. SEE SHEETS L9.06 AND L9.07 FOR IRRIGATION DETAILS.
3. CONTRACTOR TO PROVIDE AS-BUILTS WITH DIMENSIONS TO AT LEAST THREE (3) FIXED OBJECTS FOR ALL BURIED COMPONENTS.
4. IRRIGATION AS-BUILT INFORMATION REQUIRES IN-FIELD VERIFICATION PRIOR TO START OF CONSTRUCTION. FLAG ALL COMPONENTS AND HEADS.

KEY MAP

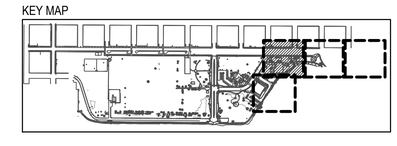

NORTH

SCALE: 1" = 20'-0"

0' 10' 20' 40'

GREEN WORKS
LANDSCAPE ARCHITECTURE
ENVIRONMENTAL DESIGN
110 SE Main St., Suite 100
Portland, OR 97214
Ph: 503 222 5612
Fax: 503 222 2283
Email: info@greenworkspc.com

LICENSED LANDSCAPE ARCHITECT
BENJAMIN JOHNSON 4183
Signature
Renewal Date
Date
STATE OF CALIFORNIA

VERIFY SCALE: DRAWINGS ARE TO SCALE IF BAR MEASURES 1"
0" 1/2" 1"

CITY OF CRESCENT CITY CALIFORNIA 1854

Project: Beachfront Park Clean CA
City of Crescent City
377 J STREET
CRESCENT CITY, CA, 95531
707-464-9506
ewier@crescentcity.org

Submittal: BID SET

Sheet Title: Irrigation Plan

© GREENWORKS, P.C. 2024, ALL RIGHTS RESERVED

THESE DRAWINGS ARE THE PROPERTY OF GREENWORKS, P.C., AND ARE NOT TO BE USED OR REPRODUCED IN ANY MANNER, EXCEPT WITH THE PRIOR WRITTEN PERMISSION OF GREENWORKS, P.C.

Date:	05/09/2025
Revisions:	
Drawn By:	SS/MM/PG
Checked By:	BJ/GM
Job No.	220065
Approved:	BJ

L7.01

Sheet No. 38 of 63

G:\PROJECTS\220065 I_CRESCENT_CITY_BEACHFRONT_PARK\02_CLEAN_CA\02_PRODUCTION\01_CAD\01_PLOT_SHEETS\220065_IRRG_COA.DWG

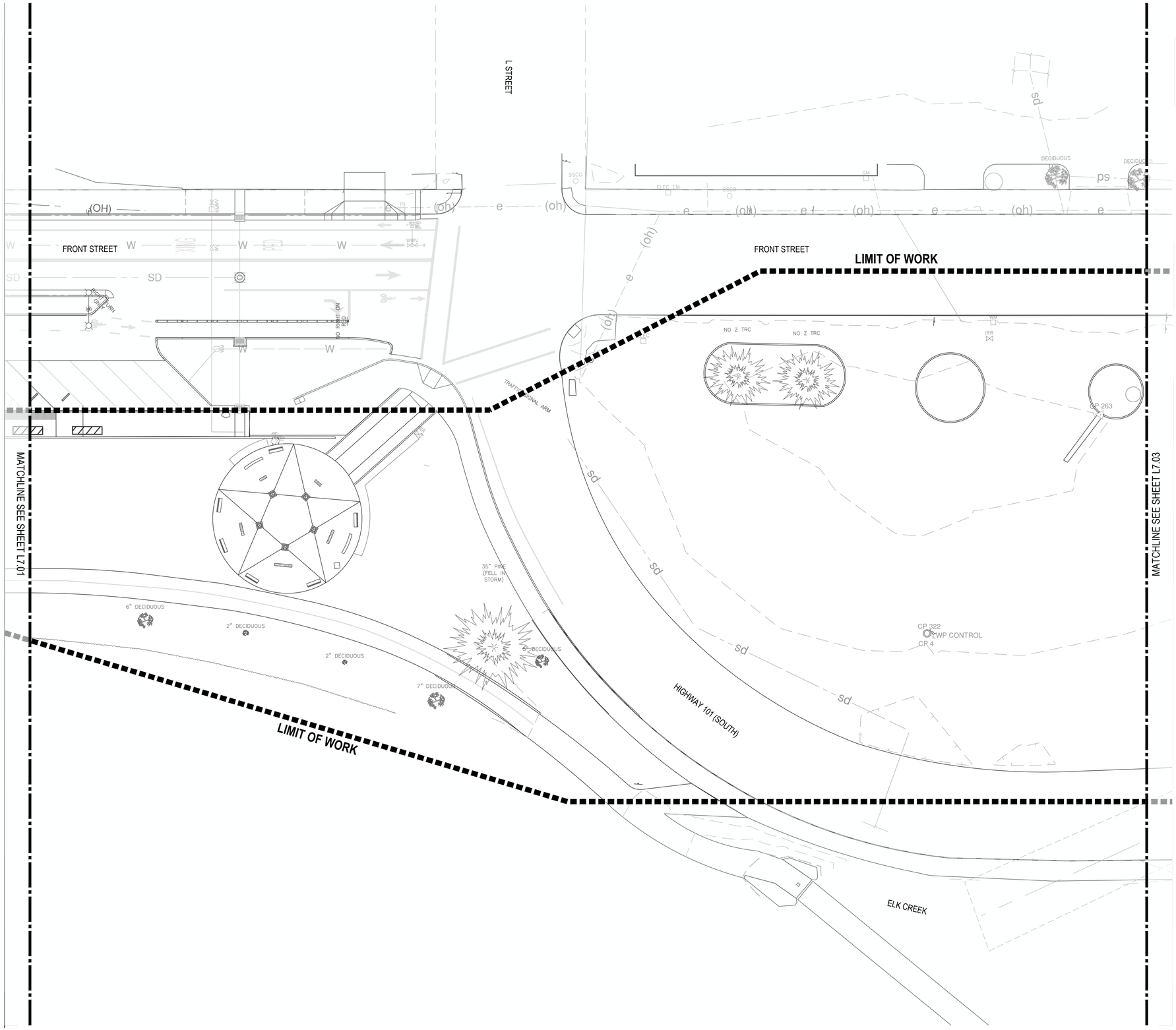

IRRIGATION LEGEND

SYMBOL	ITEM
	IRRIGATION MAINLINE: PVC SCHEDULE 40
	IRRIGATION LATERAL LINE: PVC CLASS 200 SDR 21
	PIPE SLEEVE: PVC SCHEDULE 40
	ZONE CONTROL WIRE PATH
	IRRIGATION HEAD SPRAY PATTERN

IRRIGATION KEY NOTES

1. IRRIGATION POINT-OF-CONNECTION - TAP EXISTING MAINLINE SERVICING DOGTOWN AND ADJACENT LAWN AREAS.
2. EXISTING ZONE CONTROL WIRES SHALL BE PULLED TO PROPOSED PEDESTAL LOCATION FOR RECONNECTION.
3. MAINLINE SHOWN DIAGRAMMATICALLY - LOCATE PARALLEL TO PAVING IN ADJACENT PLANTING BED.
4. LATERAL LINE SHOWN DIAGRAMMATICALLY - LOCATE PARALLEL TO PAVING IN ADJACENT PLANTING BED.
5. IRRIGATION SLEEVE SHOWN WHERE CROSSINGS ARE INTENDED. TYPICAL OF ALL PIPE AND WIRE SLEEVES. GROUP LATERALS IN COMMON SLEEVE.
6. ZONE WIRE PATH SHOWN DIAGRAMMATICALLY - LOCATE PARALLEL TO PAVING IN ADJACENT PLANTING BED.
7. EXISTING ZONE CONTROL VALVE TO REMAIN.
8. EXISTING ZONE CONTROL WIRE PATH.
9. EXISTING MAINLINE.
10. EXISTING WATER SERVICE LINE.
11. EXISTING ROTOR HEAD TO BE REMOVED AND RELOCATED OR SALVAGED.
12. RELOCATED ROTOR HEAD AND LATERAL LINE EXTENSION.
13. TEE INTO EXISTING CONTROL WIRE PATH. EXTEND WIRES AS NEEDED TO EXISTING CONTROLLER.
14. RELOCATE VALVE OUT OF PROPOSED PAVING TO THE NEAREST LANDSCAPE AREA AND INSTALL MAINLINE STUBS AS NECESSARY.
15. EXISTING ROTOR HEADS AND LATERALS
16. EXISTING ZONE CONTROL WIRES SHALL BE PULLED TO THE PROPOSED PEDESTAL LOCATION FOR RECONNECTION.
17. INSTALL LATERAL AND HEADS TO TEMPORARILY SERVICE THE ESTABLISHMENT OF THE GATEWAY LANDSCAPE. (ADD FLOW = +/- 1.88 GPM)

IRRIGATION SHEET NOTES

1. SEE SHEET L7.00 FOR IRRIGATION NOTES AND LEGEND.
2. SEE SHEETS L9.06 AND L9.07 FOR IRRIGATION DETAILS.
3. CONTRACTOR TO PROVIDE AS-BUILTS WITH DIMENSIONS TO AT LEAST THREE (3) FIXED OBJECTS FOR ALL BURIED COMPONENTS.
4. IRRIGATION AS-BUILT INFORMATION REQUIRES IN-FIELD VERIFICATION PRIOR TO START OF CONSTRUCTION. FLAG ALL COMPONENTS AND HEADS.

KEY MAP

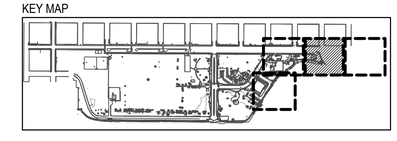

NORTH

SCALE: 1" = 20'-0"

0' 10' 20' 40'

GREEN WORKS
LANDSCAPE ARCHITECTURE
ENVIRONMENTAL DESIGN
110 SE Main St., Suite 100
Portland, OR 97214
Ph: 503 222 5612
Fax: 503 222 2283
Email: info@greenworkspc.com

LICENSED LANDSCAPE ARCHITECT
BENJAMIN JOHNSON 4193
Signature
Renewal Date
Date
STATE OF CALIFORNIA

VERIFY SCALE: DRAWINGS ARE TO SCALE IF BAR MEASURES 1"
0" 1/2" 1"

CITY OF CRESCENT CITY CALIFORNIA 1854

Project: Beachfront Park
Clean CA
City of Crescent City
377 J STREET
CRESCENT CITY, CA, 95531
707-464-9506
ewier@crescentcity.org

Submittal: BID SET

Sheet Title: Irrigation Plan

© GREENWORKS, P.C.
2024, ALL RIGHTS RESERVED

THESE DRAWINGS ARE THE PROPERTY OF GREENWORKS, P.C., AND ARE NOT TO BE USED OR REPRODUCED IN ANY MANNER, EXCEPT WITH THE PRIOR WRITTEN PERMISSION OF GREENWORKS, P.C.

Date:	05/09/2025
Revisions:	
Drawn By:	SS/MM/PG
Checked By:	BJ/GM
Job No.	220065
Approved:	BJ

L7.02

Sheet No. 39 of 63

G:\PROJECTS\220065-1_CRESCENT_CITY_BEACHFRONT_PARK\02_CLEAN_CA\02_PRODUCTION\01_CAD\01_PLOT_SHEETS\220065_IRRIG_CCA.DWG

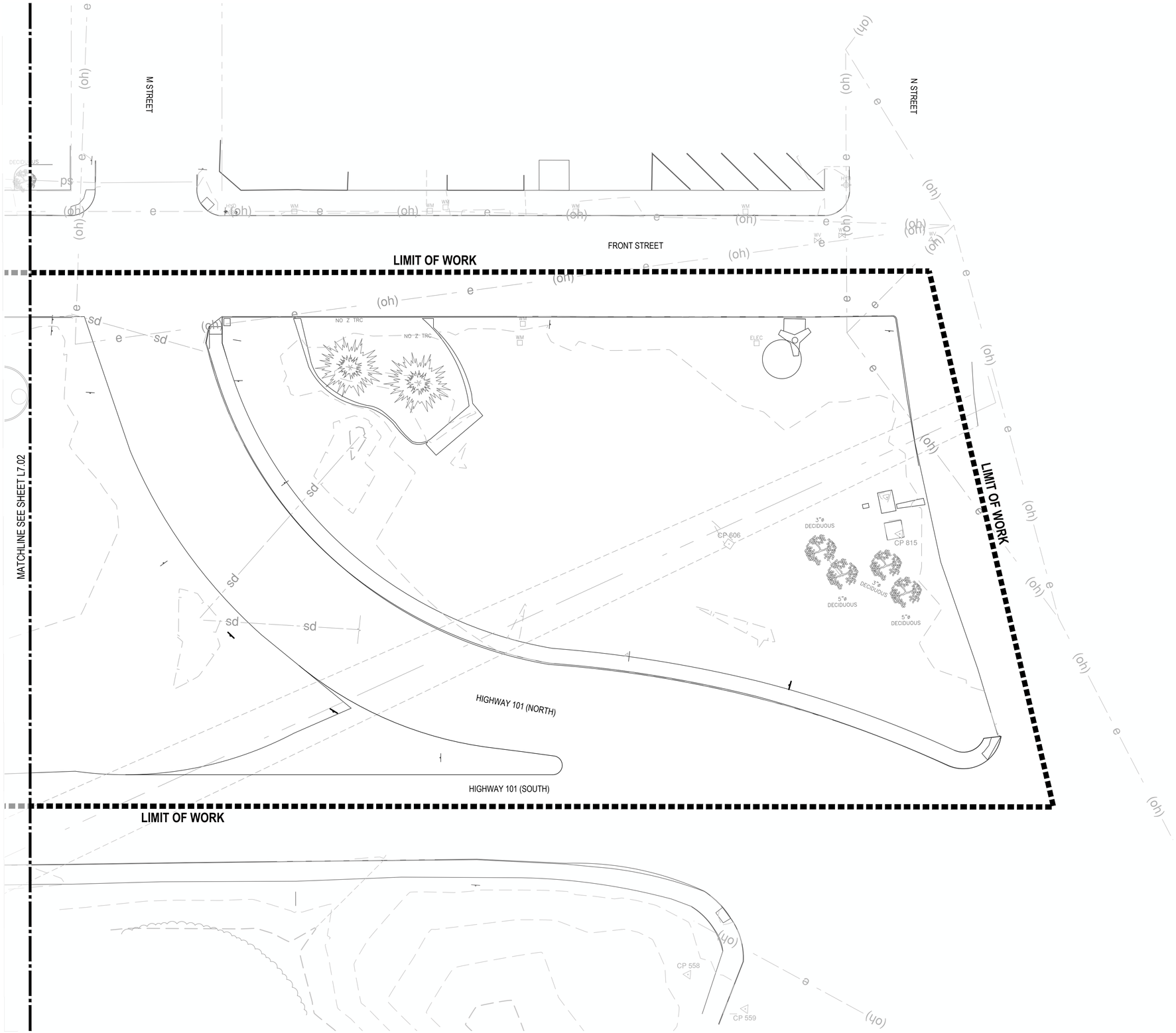

IRRIGATION LEGEND

SYMBOL	ITEM
	IRRIGATION MAINLINE: PVC SCHEDULE 40
	IRRIGATION LATERAL LINE: PVC CLASS 200 SDR 21
	PIPE SLEEVE: PVC SCHEDULE 40
	ZONE CONTROL WIRE PATH
	IRRIGATION HEAD SPRAY PATTERN

IRRIGATION KEY NOTES

1. IRRIGATION POINT-OF-CONNECTION - TAP EXISTING MAINLINE SERVICING DOGTOWN AND ADJACENT LAWN AREAS.
2. EXISTING ZONE CONTROL WIRES SHALL BE PULLED TO PROPOSED PEDESTAL LOCATION FOR RECONNECTION.
3. MAINLINE SHOWN DIAGRAMMATICALLY - LOCATE PARALLEL TO PAVING IN ADJACENT PLANTING BED.
4. LATERAL LINE SHOWN DIAGRAMMATICALLY - LOCATE PARALLEL TO PAVING IN ADJACENT PLANTING BED.
5. IRRIGATION SLEEVE SHOWN WHERE CROSSINGS ARE INTENDED. TYPICAL OF ALL PIPE AND WIRE SLEEVES. GROUP LATERALS IN COMMON SLEEVE.
6. ZONE WIRE PATH SHOWN DIAGRAMMATICALLY - LOCATE PARALLEL TO PAVING IN ADJACENT PLANTING BED.
7. EXISTING ZONE CONTROL VALVE TO REMAIN.
8. EXISTING ZONE CONTROL WIRE PATH.
9. EXISTING MAINLINE.
10. EXISTING WATER SERVICE LINE.
11. EXISTING ROTOR HEAD TO BE REMOVED AND RELOCATED OR SALVAGED.
12. RELOCATED ROTOR HEAD AND LATERAL LINE EXTENSION.
13. TEE INTO EXISTING CONTROL WIRE PATH. EXTEND WIRES AS NEEDED TO EXISTING CONTROLLER.
14. RELOCATE VALVE OUT OF PROPOSED PAVING TO THE NEAREST LANDSCAPE AREA AND INSTALL MAINLINE STUBS AS NECESSARY.
15. EXISTING ROTOR HEADS AND LATERALS
16. EXISTING ZONE CONTROL WIRES SHALL BE PULLED TO THE PROPOSED PEDESTAL LOCATION FOR RECONNECTION.
17. INSTALL LATERAL AND HEADS TO TEMPORARILY SERVICE THE ESTABLISHMENT OF THE GATEWAY LANDSCAPE. (ADD FLOW = +/- 1.88 GPM)

IRRIGATION SHEET NOTES

1. SEE SHEET L7.00 FOR IRRIGATION NOTES AND LEGEND.
2. SEE SHEETS L9.06 AND L9.07 FOR IRRIGATION DETAILS.
3. CONTRACTOR TO PROVIDE AS-BUILTS WITH DIMENSIONS TO AT LEAST THREE (3) FIXED OBJECTS FOR ALL BURIED COMPONENTS.
4. IRRIGATION AS-BUILT INFORMATION REQUIRES IN-FIELD VERIFICATION PRIOR TO START OF CONSTRUCTION. FLAG ALL COMPONENTS AND HEADS.

KEY MAP

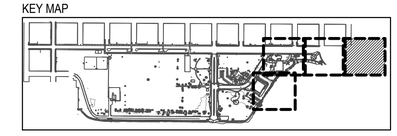

NORTH

SCALE: 1" = 20'-0"

0' 10' 20' 40'

GREEN WORKS
LANDSCAPE ARCHITECTURE
ENVIRONMENTAL DESIGN
110 SE Main St., Suite 100
Portland, OR 97214
Ph: 503 222 5612
Fax: 503 222 2283
Email: info@greenworkspc.com

LICENSED LANDSCAPE ARCHITECT
BENJAMIN JOHNSON 6182
Signature
Renewal Date
Date
STATE OF CALIFORNIA

VERIFY SCALE: DRAWINGS ARE TO SCALE IF BAR MEASURES 1"
0" 1/2" 1"

CITY OF CRESCENT CITY CALIFORNIA 1854

Project: Beachfront Park Clean CA
City of Crescent City
377 J STREET
CRESCENT CITY, CA, 95531
707-464-9506
ewier@crescentcity.org

Submittal: BID SET

Sheet Title: Irrigation Plan

© GREENWORKS, P.C.
2024, ALL RIGHTS RESERVED

THESE DRAWINGS ARE THE PROPERTY OF GREENWORKS, P.C., AND ARE NOT TO BE USED OR REPRODUCED IN ANY MANNER, EXCEPT WITH THE PRIOR WRITTEN PERMISSION OF GREENWORKS, P.C.

Date:	05/09/2025
Revisions:	
Drawn By:	SS/MM/PG
Checked By:	BJ/GM
Job No.	220065
Approved:	BJ

L7.03

Sheet No. 40 of 63

G:\PROJECTS\220065.1_CRESCENT_CITY_BEACHFRONT_PARK\02_CLEAN_CA\02_PRODUCTION\01_CAD\01_PLOT_SHEETS\220065_IRRG_CCA.DWG

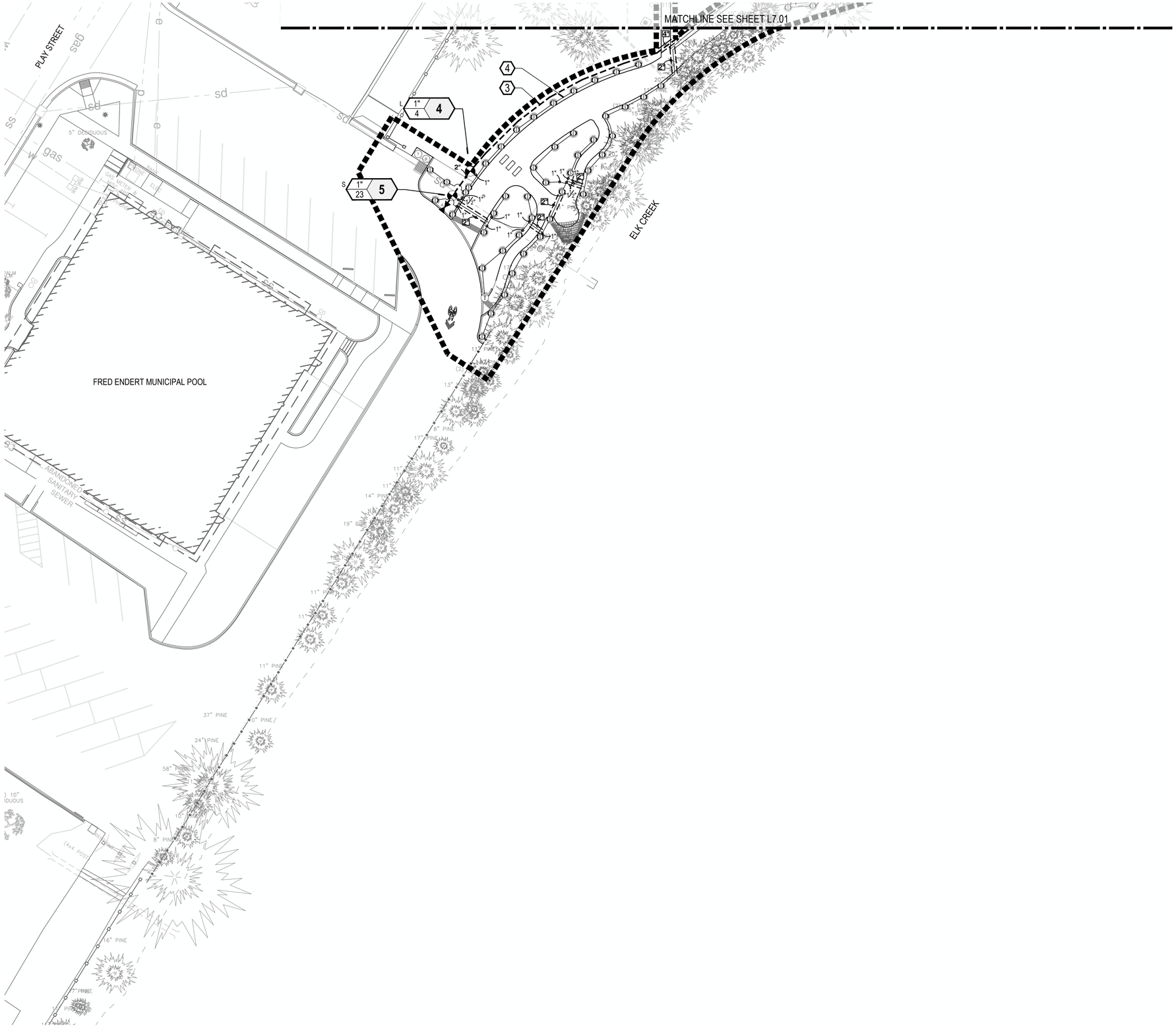

IRRIGATION LEGEND

SYMBOL	ITEM
	IRRIGATION MAINLINE: PVC SCHEDULE 40
	IRRIGATION LATERAL LINE: PVC CLASS 200 SDR 21
	PIPE SLEEVE: PVC SCHEDULE 40
	ZONE CONTROL WIRE PATH
	IRRIGATION HEAD SPRAY PATTERN

IRRIGATION KEY NOTES

1. IRRIGATION POINT-OF-CONNECTION - TAP EXISTING MAINLINE SERVICING DOGTOWN AND ADJACENT LAWN AREAS.
2. EXISTING ZONE CONTROL WIRES SHALL BE PULLED TO PROPOSED PEDESTAL LOCATION FOR RECONNECTION.
3. MAINLINE SHOWN DIAGRAMMATICALLY - LOCATE PARALLEL TO PAVING IN ADJACENT PLANTING BED.
4. LATERAL LINE SHOWN DIAGRAMMATICALLY - LOCATE PARALLEL TO PAVING IN ADJACENT PLANTING BED.
5. IRRIGATION SLEEVE SHOWN WHERE CROSSINGS ARE INTENDED. TYPICAL OF ALL PIPE AND WIRE SLEEVES. GROUP LATERALS IN COMMON SLEEVE.
6. ZONE WIRE PATH SHOWN DIAGRAMMATICALLY - LOCATE PARALLEL TO PAVING IN ADJACENT PLANTING BED.
7. EXISTING ZONE CONTROL VALVE TO REMAIN.
8. EXISTING ZONE CONTROL WIRE PATH.
9. EXISTING MAINLINE.
10. EXISTING WATER SERVICE LINE.
11. EXISTING ROTOR HEAD TO BE REMOVED AND RELOCATED OR SALVAGED.
12. RELOCATED ROTOR HEAD AND LATERAL LINE EXTENSION.
13. TEE INTO EXISTING CONTROL WIRE PATH. EXTEND WIRES AS NEEDED TO EXISTING CONTROLLER.
14. RELOCATE VALVE OUT OF PROPOSED PAVING TO THE NEAREST LANDSCAPE AREA AND INSTALL MAINLINE STUBS AS NECESSARY.
15. EXISTING ROTOR HEADS AND LATERALS
16. EXISTING ZONE CONTROL WIRES SHALL BE PULLED TO THE PROPOSED PEDESTAL LOCATION FOR RECONNECTION.
17. INSTALL LATERAL AND HEADS TO TEMPORARILY SERVICE THE ESTABLISHMENT OF THE GATEWAY LANDSCAPE. (ADD FLOW = +/- 1.88 GPM)

IRRIGATION SHEET NOTES

1. SEE SHEET L7.00 FOR IRRIGATION NOTES AND LEGEND.
2. SEE SHEETS L9.06 AND L9.07 FOR IRRIGATION DETAILS.
3. CONTRACTOR TO PROVIDE AS-BUILTS WITH DIMENSIONS TO AT LEAST THREE (3) FIXED OBJECTS FOR ALL BURIED COMPONENTS.
4. IRRIGATION AS-BUILT INFORMATION REQUIRES IN-FIELD VERIFICATION PRIOR TO START OF CONSTRUCTION. FLAG ALL COMPONENTS AND HEADS.

KEY MAP

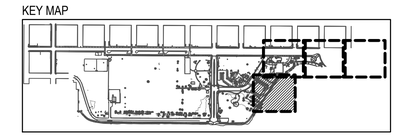

NORTH

SCALE: 1" = 20'-0"

0' 10' 20' 40'

GREEN WORKS
LANDSCAPE ARCHITECTURE
ENVIRONMENTAL DESIGN
110 SE Main St., Suite 100
Portland, OR 97214
Ph: 503 222 5612
Fax: 503 222 2283
Email: info@greenworkspc.com

LICENSED LANDSCAPE ARCHITECT
BENJAMIN JOHNSON 6183
Signature
Renewal Date
Date
STATE OF CALIFORNIA

VERIFY SCALE: DRAWINGS ARE TO SCALE IF BAR MEASURES 1"
0" 1/2" 1"

CITY OF CRESCENT CITY CALIFORNIA 1854

Project: Beachfront Park Clean CA
City of Crescent City
377 J STREET
CRESCENT CITY, CA, 95531
707-464-9506
ewier@crescentcity.org

Submittal: BID SET

Sheet Title: Irrigation Plan

© GREENWORKS, P.C. 2024. ALL RIGHTS RESERVED

THESE DRAWINGS ARE THE PROPERTY OF GREENWORKS, P.C., AND ARE NOT TO BE USED OR REPRODUCED IN ANY MANNER, EXCEPT WITH THE PRIOR WRITTEN PERMISSION OF GREENWORKS, P.C.

Date:	05/09/2025
Revisions:	
Drawn By:	SS/MM/PG
Checked By:	BJ/GM
Job No.	220065
Approved:	BJ

L7.04

Sheet No. 41 of 63

G:\PROJECTS\220065.1_CRESCENT_CITY_BEACHFRONT_PARK\02_CLEAN_CA\02_PRODUCTION\01_CAD\01_PLOT_SHEETS\220065_IRRG_CCA.DWG

SHRUB & GROUNDCOVER SCHEDULE

SYMBOL / ID	CODE	QTY	BOTANICAL NAME / COMMON NAME	SIZE & TYPE	SPACING
	ARDO	6	ARTEMISIA DOUGLASIANA / MUGWORT	1 GAL CONT	AS SHOWN
	CEGL	24	CEANOTHUS GLORIOSUS / POINT REYES CEANOTHUS	2 GAL CONT	AS SHOWN
	CEIN	2	CEANOTHUS INTEGERRIMUS / DEER BRUSH	1 GAL CONT	AS SHOWN
	CEVE	5	CEANOTHUS VELUTINUS / SNOWBRUSH	1 GAL CONT	AS SHOWN
	COCO	4	CORYLUS CORNUTA CALIFORNICA / WESTERN HAZELNUT	#2 CONT	AS SHOWN
	ESNW	58	ESCALLONIA X 'NEWPORT DWARF' / NEWPORT DWARF ESCALLONIA	1 GAL CONT	AS SHOWN
	GASH	30	GAULTHERIA SHALLON / SALAL	4" POT	AS SHOWN
	HEAR	2	HETEROMELES ARBUTIFOLIA / TOYON	5 GAL CONT	AS SHOWN
	MAAQ	64	MAHONIA AQUIFOLIUM / OREGON GRAPE	1 GAL CONT	AS SHOWN
	MARE	69	MAHONIA REPENS / CREEPING MAHONIA	1 GAL CONT	AS SHOWN
	PHCA	2	PHYSOCARPUS CAPITATUS / PACIFIC NINEBARK	1 GAL CONT	AS SHOWN
	RHNE	7	RHODODENDRON NEOGLANDULOSUM / SWAMP TEA	1 GAL CONT	AS SHOWN
	RIRO	6	RIBES ROEZLII VAR. CRUENTUM / SPINY FRUITED GOOSEBERRY	1 GAL CONT	AS SHOWN
	RISA	4	RIBES SANGUINEUM / RED FLOWERING CURRANT	1 GAL CONT	AS SHOWN
	RONU	3	ROSA NUTKANA VAR. NUTKANA / NOOTKA ROSE	#2 CONT	AS SHOWN
	RUSP	6	RUBUS SPECTABILIS / SALMONBERRY	1 GAL CONT	AS SHOWN
	SAEX	1	SALIX EXIGUA / NARROW LEAF WILLOW]	5 GAL CONT	AS SHOWN
	SAME	1	SAMBUCUS MEXICANA / BLUE ELDERBERRY	1 GAL CONT	AS SHOWN
	SARA	2	SAMBUCUS RACEMOSA / RED ELDERBERRY	1 GAL CONT	AS SHOWN
	VAOV	25	VACCINIUM OVATUM / EVERGREEN HUCKLEBERRY	1 GAL CONT	AS SHOWN
	WOFI	8	WOODWARDIA FIMBRIATA / GIANT CHAIN FERN	1 GAL CONT	AS SHOWN
	ADAL	26	ADIANTUM ALEUTICUM / WESTERN MAIDENHAIR FERN	1 GAL CONT	12" OC
	ANDI	116	ANTENNARIA DIOICA / PUSSYTOES	1 GAL CONT	12" OC
	ARUV	28	ARCTOSTAPHYLOS UVA-URSI / KINNIKINNICK	1 GAL CONT	24" OC
	DECE	76	DESCHAMPSIA CESPITOSA / TUFTED HAIR GRASS	1 GAL CONT	24" OC
	ERGL	346	ERIGERON GLAUCUS / SEASIDE DAISY	4" POT	12" OC
	ERLA	96	ERIOPHYLLUM LANATUM / OREGON SUNSHINE	4" POT	12" OC
	FRVE	522	FRAGARIA VESCA / WOOD STRAWBERRY	4" POT	12" OC
	IRMA	75	IRIS MACROSIPHON / BOWLTUBE IRIS	4" POT	12" OC
	JUPA	30	JUNCUS PATENS / CALIFORNIA GRAY RUSH	4" POT	24" OC
	PEFR	31	PETASITES FRIGIDUS VAR. PALMATUS / PALMATET COLTSFOOT	1 GAL CONT	12" OC
	POMU	21	POLYSTICHUM MUNITUM / WESTERN SWORD FERN	1 GAL CONT	30" OC

TREE SCHEDULE

SYMBOL / ID	CODE	QTY	BOTANICAL NAME / COMMON NAME	SIZE & TYPE	SPACING
	CUMA	2	CUPRESSUS MACROCARPA / MONTEREY CYPRESS	6`-8` HT B&B	AS SHOWN
	FRPU	2	FRANGULA PURSHIANA / CASCARA BUCKTHORN	4`-6` HT, B&B	AS SHOWN
	PISI	1	PICEA SITCHENSIS / SITKA SPRUCE	4`-6` HT, B&B	AS SHOWN
	PICO	2	PINUS CONTORTA CONTORTA / SHORE PINE	6`-8` HT B&B	AS SHOWN
	SESE	5	SEQUOIA SEMPERVIRENS / COAST REDWOOD	4`-6` HT, B&B	AS SHOWN
	UMCA	6	UMBELLULARIA CALIFORNICA / BAY LAUREL	4`-6` HT, B&B	AS SHOWN

PLANT MIX SCHEDULE

SYMBOL / ID	CODE	QTY	BOTANICAL NAME / COMMON NAME	SIZE & TYPE	PERCENTAGE
FILTER STRIP - SHADE					
	IRR	242 SF	IRIS DOUGLASIANA / DOUGLAS IRIS	24" OC	20%
	CATU		CAREX TUMULICOLA / FOOTHILL SEDGE	12" OC	50%
	POMU		POLYSTICHUM MUNITUM / WESTERN SWORD FERN	36" OC	30%

MISC SCHEDULE

SYMBOL / ID	QTY	DESCRIPTION	REMARKS
	156 LF	ROOT BARRIER	PLACE AT EDGE OF PAVING ONLY.

SEEDING SCHEDULE

SYMBOL / ID	QTY	DESCRIPTION	REMARKS
	0.60 AC	TURF SEEDING	CLEAR AND GRUB ALL AREAS PRIOR. QUANTITY INCLUDES BID ALT #2.

GENERAL PLANTING NOTES

1. PROVIDE PLANTING SOIL AND BARK MULCH OF THE COMPOSITION AND DEPTHS REQUIRED IN ACCORDANCE WITH THE DRAWINGS AND SPECIFICATIONS.
2. INSTALL ALL PLANT MATERIALS IN ACCORDANCE WITH THE DRAWINGS AND SPECIFICATIONS.
3. PLANT QUANTITIES ARE LISTED FOR CONVENIENCE ONLY. ALL COUNTS SHALL BE VERIFIED PRIOR TO INSTALLATION. IN THE CASE OF A DISCREPANCY BETWEEN THE SCHEDULE AND THE AREAS SHOWN ON THE PLANS; PLANTS INDICATED ON THE PLANS SHALL SUPERSEDE QUANTITIES LISTED IN THE SCHEDULE.
4. UTILITY LOCATIONS INDICATED MAY DIFFER FROM FIELD CONDITIONS. FIELD VERIFY ALL UTILITIES PRIOR TO INSTALLATION. CONFLICTS BETWEEN EXISTING AND PROPOSED UTILITIES SHALL BE BROUGHT TO THE ATTENTION OF THE OWNER'S REPRESENTATIVE IMMEDIATELY

[X] BID ALTERNATE LIST

1. BID ALTERNATE #1 - MEDIAN EXTENSION (ASPHALT REMOVAL AND SEEDED LAWN).

GREEN WORKS

LANDSCAPE ARCHITECTURE
ENVIRONMENTAL DESIGN

110 SE Main St., Suite 100
Portland, OR 97214
Ph: 503 222 5612
Fax: 503 222 2283
Email: info@greenworkspc.com

LICENSED LANDSCAPE ARCHITECT
BENJAMIN JOHNSON 6162
Signature
Renewal Date
Date
STATE OF CALIFORNIA

VERIFY SCALE: DRAWINGS ARE TO SCALE IF BAR MEASURES 1"
0" 1/2" 1"

CITY OF CRESCENT CITY CALIFORNIA 1854

Project: Beachfront Park Clean CA
City of Crescent City
377 J STREET
CRESCENT CITY, CA, 95531
707-464-9506
ewier@crescentcity.org

Submittal: BID SET

Sheet Title: **Planting Notes And Legend**

© GREENWORKS, P.C. 2024, ALL RIGHTS RESERVED

THESE DRAWINGS ARE THE PROPERTY OF GREENWORKS, P.C., AND ARE NOT TO BE USED OR REPRODUCED IN ANY MANNER, EXCEPT WITH THE PRIOR WRITTEN PERMISSION OF GREENWORKS, P.C.

Date:	05/09/2025
Revisions:	
Drawn By:	SS/MM/PG
Checked By:	BJ/GM
Job No.	220065
Approved:	BJ

L8.00

G:\PROJECTS\220065_CRESCENT_CITY_BEACHFRONT_PARK\02_CLEAN_CA\02_PRODUCTION\01_CADD\1_PLOT_SHEETS\220065_PLNT_CCA.DWG

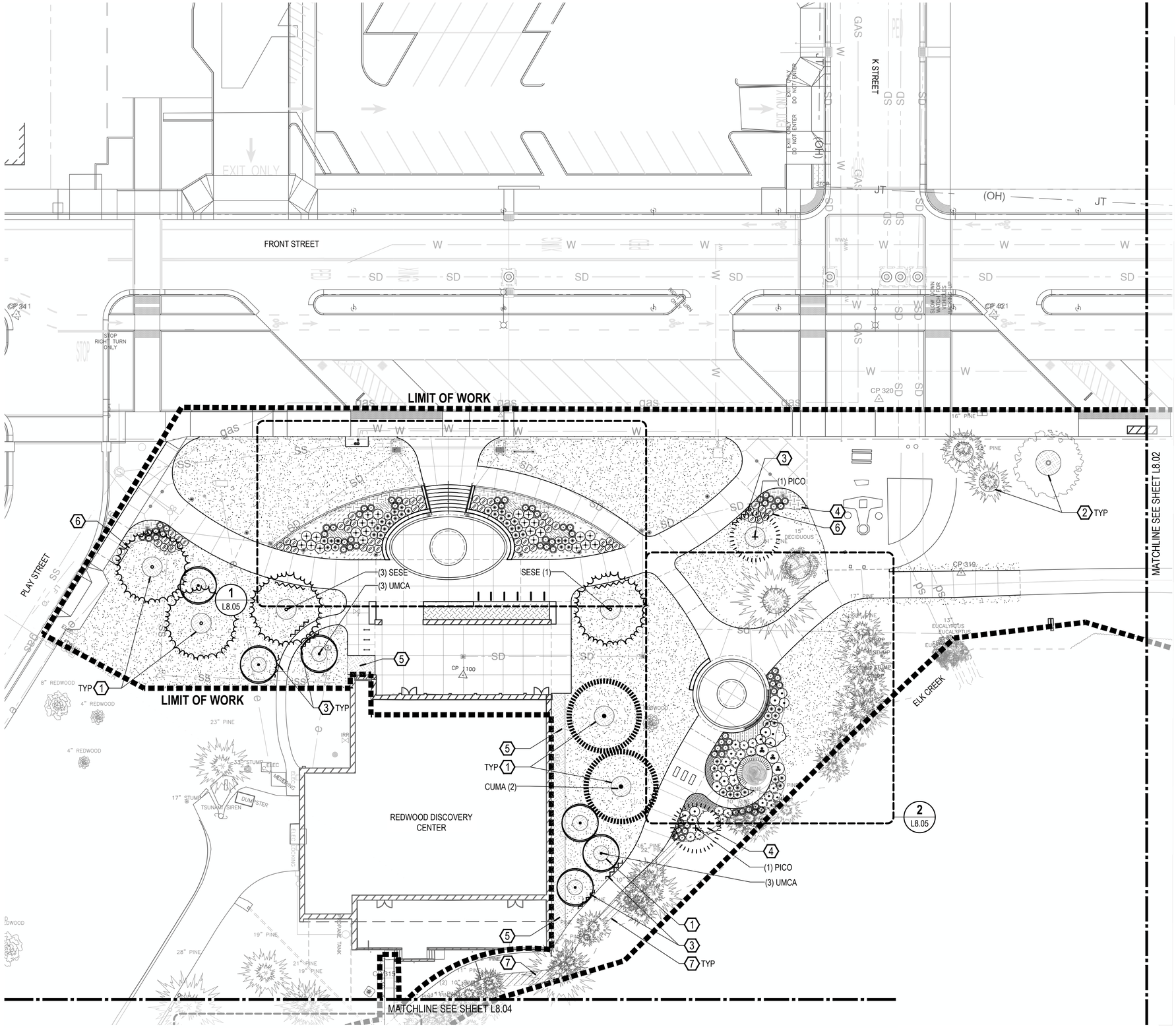

LEGEND

SYMBOL	ITEM
CONIFER DECIDUOUS	EXISTING TREES
	FILTER STRIP - SHADE MIX
	SEEDED LAWN
	MULCH

PLANTING SHEET NOTES

1. SEE SHEET L8.00 FOR PLANTING SCHEDULE AND NOTES.
2. SEE SHEET L9.08 FOR PLANTING DETAILS.
3. LIMIT OF WORK LINE INDICATED FOR REFERENCE ONLY.

PLANTING KEY NOTES

1. MULCH RING FOR PROPOSED TREES, AS SHOWN.
2. MULCH RING FOR EXISTING TREES, AS SHOWN.
3. PROPOSED ROOT BARRIER ALONG EDGE OF PAVING ONLY.
4. MULCH PATTERN NOT SHOWN IN PLANT BEDS, SEE DETAILS.
5. APPLY MULCH AT EDGE OF BUILDING.
6. SHOVEL CUT EDGE CONDITION ALONG PLANT BED.
7. FILTER STRIP - SHADE MIX.

KEY MAP

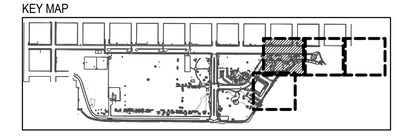

NORTH

SCALE: 1" = 20'-0"

0' 10' 20' 40'

GREEN WORKS

LANDSCAPE ARCHITECTURE
ENVIRONMENTAL DESIGN

110 SE Main St., Suite 100
Portland, OR 97214
Ph: 503 222 5612
Fax: 503 222 2283
Email: info@greenworkspc.com

LICENSED LANDSCAPE ARCHITECT
BENJAMIN JOHNSON 6182
Signature
Renewal Date
Date
STATE OF CALIFORNIA

VERIFY SCALE: DRAWINGS ARE TO SCALE IF BAR MEASURES 1"
0" 1/2" 1"

CITY OF CRESCENT CITY CALIFORNIA 1854

Project:
Beachfront Park Clean CA

City of Crescent City
377 J STREET
CRESCENT CITY, CA, 95531
707-464-9506
ewier@crescentcity.org

Submittal: BID SET

Sheet Title:
Planting Plan

© GREENWORKS, P.C.
2024, ALL RIGHTS RESERVED

THESE DRAWINGS ARE THE PROPERTY OF GREENWORKS, P.C., AND ARE NOT TO BE USED OR REPRODUCED IN ANY MANNER, EXCEPT WITH THE PRIOR WRITTEN PERMISSION OF GREENWORKS, P.C.

Date:	05/09/2025
Revisions:	
Drawn By:	SS/MM/PG
Checked By:	BJ/GM
Job No.	220065
Approved:	BJ

L8.01

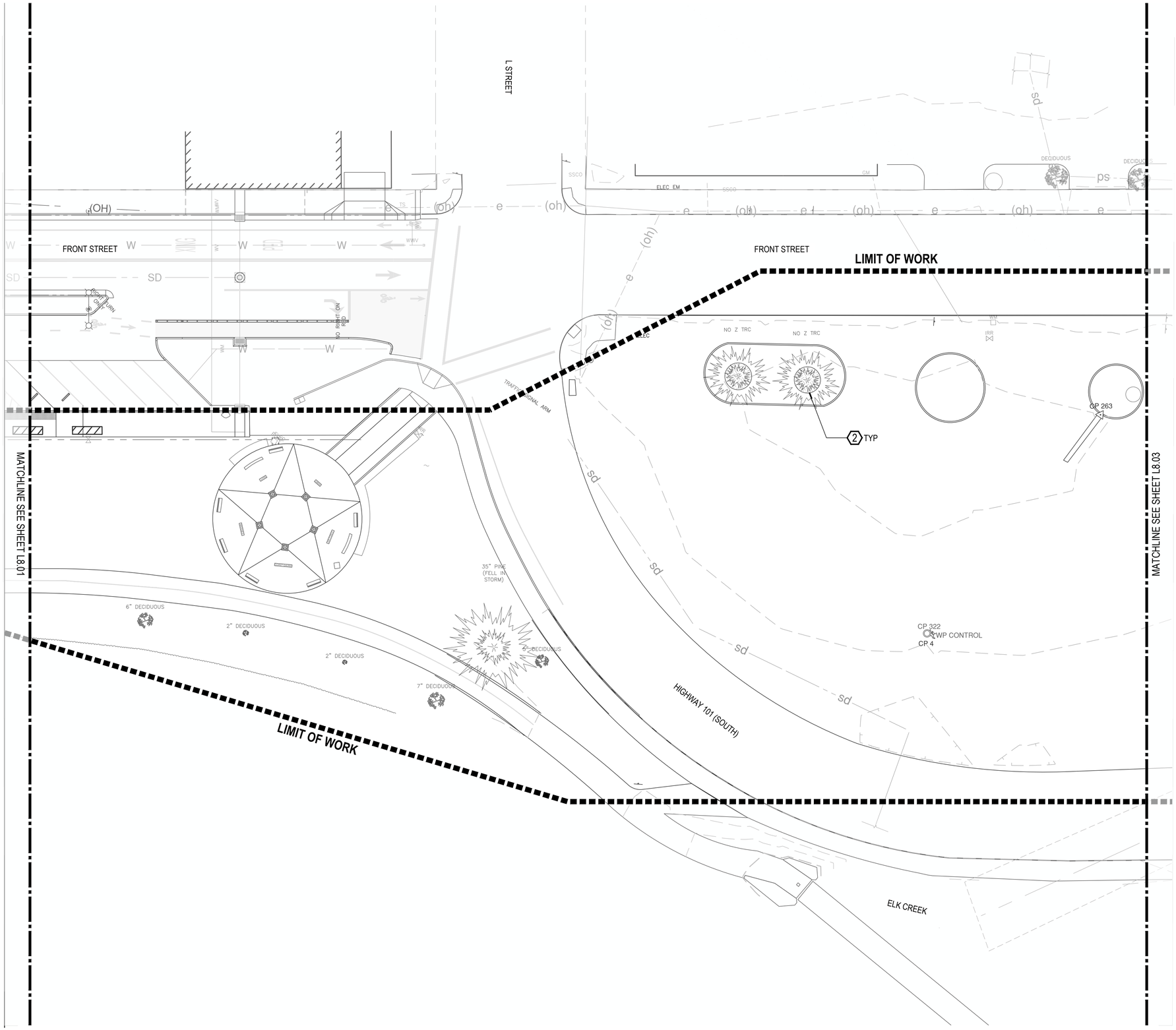

LEGEND

SYMBOL	ITEM
CONIFER DECIDUOUS	EXISTING TREES
	FILTER STRIP - SHADE MIX
	SEEDED LAWN
	MULCH

PLANTING SHEET NOTES

1. SEE SHEET L8.00 FOR PLANTING SCHEDULE AND NOTES.
2. SEE SHEET L9.08 FOR PLANTING DETAILS.
3. LIMIT OF WORK LINE INDICATED FOR REFERENCE ONLY.

(X) PLANTING KEY NOTES

1. MULCH RING FOR PROPOSED TREES, AS SHOWN.
2. MULCH RING FOR EXISTING TREES, AS SHOWN.
3. PROPOSED ROOT BARRIER ALONG EDGE OF PAVING ONLY.
4. MULCH PATTERN NOT SHOWN IN PLANT BEDS, SEE DETAILS.
5. APPLY MULCH AT EDGE OF BUILDING.
6. SHOVEL CUT EDGE CONDITION ALONG PLANT BED.
7. FILTER STRIP - SHADE MIX.

KEY MAP

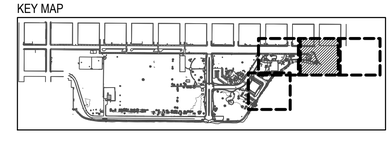

NORTH

SCALE: 1" = 20'-0"

0' 10' 20' 40'

GREEN WORKS
LANDSCAPE ARCHITECTURE
ENVIRONMENTAL DESIGN
110 SE Main St., Suite 100
Portland, OR 97214
Ph: 503 222 5612
Fax: 503 222 2283
Email: info@greenworkspc.com

LICENSED LANDSCAPE ARCHITECT
BENJAMIN JOHNSON 4183
Signature
Renewal Date
Date
STATE OF CALIFORNIA

VERIFY SCALE: DRAWINGS ARE TO SCALE IF BAR MEASURES 1"
0" 1/2" 1"

CITY OF CRESCENT CITY CALIFORNIA 1854

Project:
Beachfront Park
Clean CA
City of Crescent City
377 J STREET
CRESCENT CITY, CA, 95531
707-464-9506
ewier@crescentcity.org

Submittal: BID SET

Sheet Title:
Planting Plan

© GREENWORKS, P.C.
2024, ALL RIGHTS RESERVED

THESE DRAWINGS ARE THE PROPERTY OF GREENWORKS, P.C., AND ARE NOT TO BE USED OR REPRODUCED IN ANY MANNER, EXCEPT WITH THE PRIOR WRITTEN PERMISSION OF GREENWORKS, P.C.

Date:	05/09/2025
Revisions:	
Drawn By:	SS/MM/PG
Checked By:	BJ/GM
Job No.	220065
Approved:	BJ

L8.02

Sheet No. 44 of 63

G:\PROJECTS\220065-1_CRESCENT_CITY_BEACHFRONT_PARK\02_CLEAN_CA\02_PRODUCTION\01_CAD\01_PLOT_SHEETS\220065_PLNT_CCA.DWG

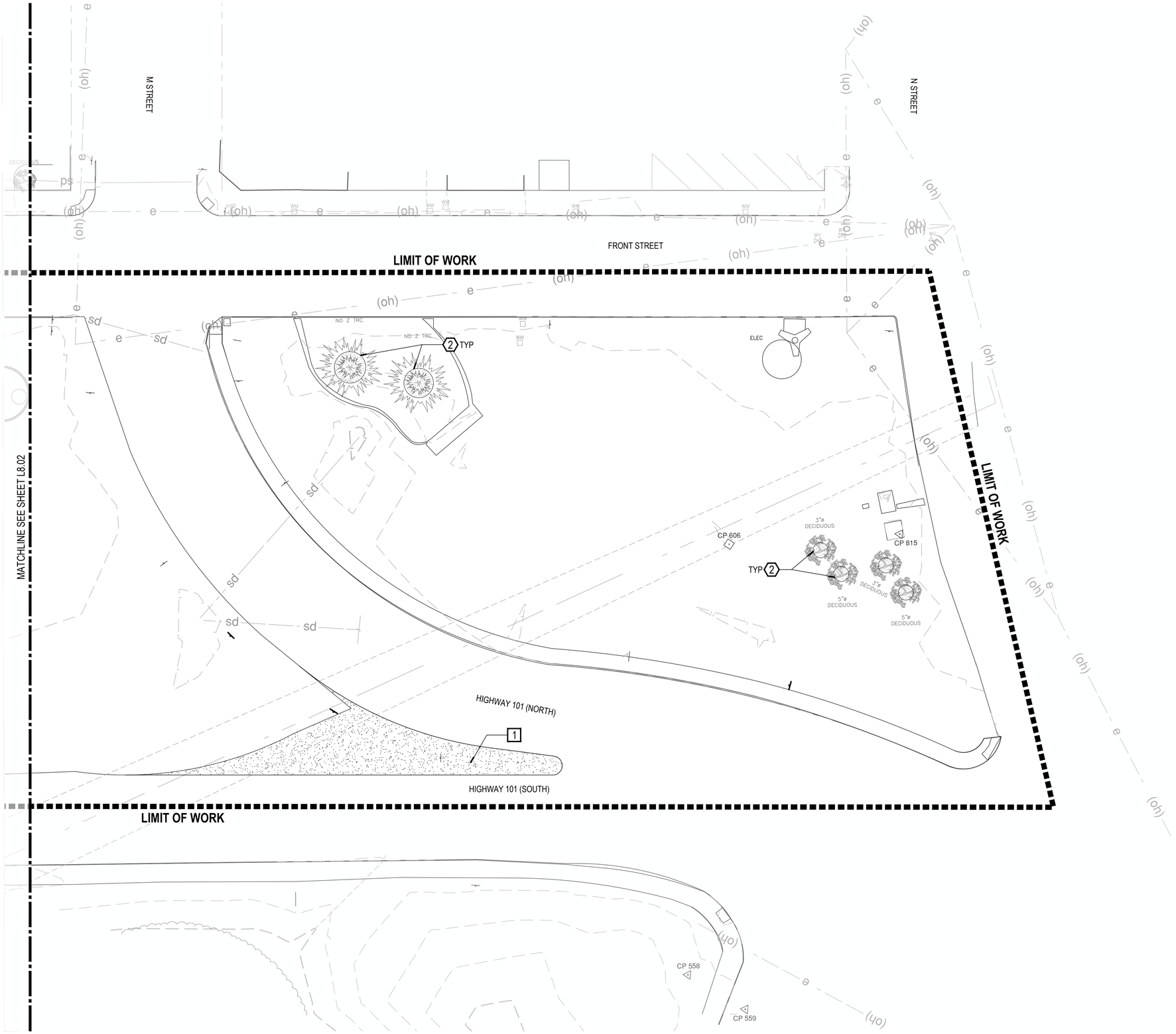

LEGEND

SYMBOL	ITEM
CONIFER DECIDUOUS	EXISTING TREES
	FILTER STRIP - SHADE MIX
	SEEDED LAWN
	MULCH

PLANTING SHEET NOTES

1. SEE SHEET L8.00 FOR PLANTING SCHEDULE AND NOTES.
2. SEE SHEET L9.08 FOR PLANTING DETAILS.
3. LIMIT OF WORK LINE INDICATED FOR REFERENCE ONLY.

X PLANTING KEY NOTES

1. MULCH RING FOR PROPOSED TREES, AS SHOWN.
2. MULCH RING FOR EXISTING TREES, AS SHOWN.
3. PROPOSED ROOT BARRIER ALONG EDGE OF PAVING ONLY.
4. MULCH PATTERN NOT SHOWN IN PLANT BEDS, SEE DETAILS.
5. APPLY MULCH AT EDGE OF BUILDING.
6. SHOVEL CUT EDGE CONDITION ALONG PLANT BED.
7. FILTER STRIP - SHADE MIX.

KEY MAP

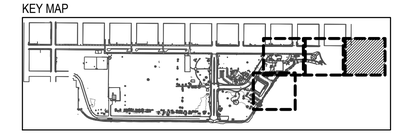

NORTH

SCALE: 1" = 20'-0"

0' 10' 20' 40'

GREEN WORKS
LANDSCAPE ARCHITECTURE
ENVIRONMENTAL DESIGN
110 SE Main St., Suite 100
Portland, OR 97214
Ph: 503 222 5612
Fax: 503 222 2283
Email: info@greenworkspc.com

LICENSED LANDSCAPE ARCHITECT
BENJAMIN JOHNSON #493
Signature
Renewal Date
Date
STATE OF CALIFORNIA

VERIFY SCALE: DRAWINGS ARE TO SCALE IF BAR MEASURES 1"
0" 1/2" 1"

CITY OF CRESCENT CITY CALIFORNIA 1854

Project: Beachfront Park Clean CA
City of Crescent City
377 J STREET
CRESCENT CITY, CA, 95531
707-464-9506
ewier@crescentcity.org

Submittal: BID SET

Sheet Title: Planting Plan

© GREENWORKS, P.C. 2024, ALL RIGHTS RESERVED
THESE DRAWINGS ARE THE PROPERTY OF GREENWORKS, P.C., AND ARE NOT TO BE USED OR REPRODUCED IN ANY MANNER, EXCEPT WITH THE PRIOR WRITTEN PERMISSION OF GREENWORKS, P.C.

Date:	05/09/2025
Revisions:	
Drawn By:	SS/MM/PG
Checked By:	BJ/GM
Job No.	220065
Approved:	BJ

L8.03

G:\PROJECTS\220065.1_CRESCENT_CITY_BEACHFRONT_PARK\02_CLEAN_CA\02_PRODUCTION\01_CAD\01_PLOT_SHEETS\220065_PLNT_CCA.DWG

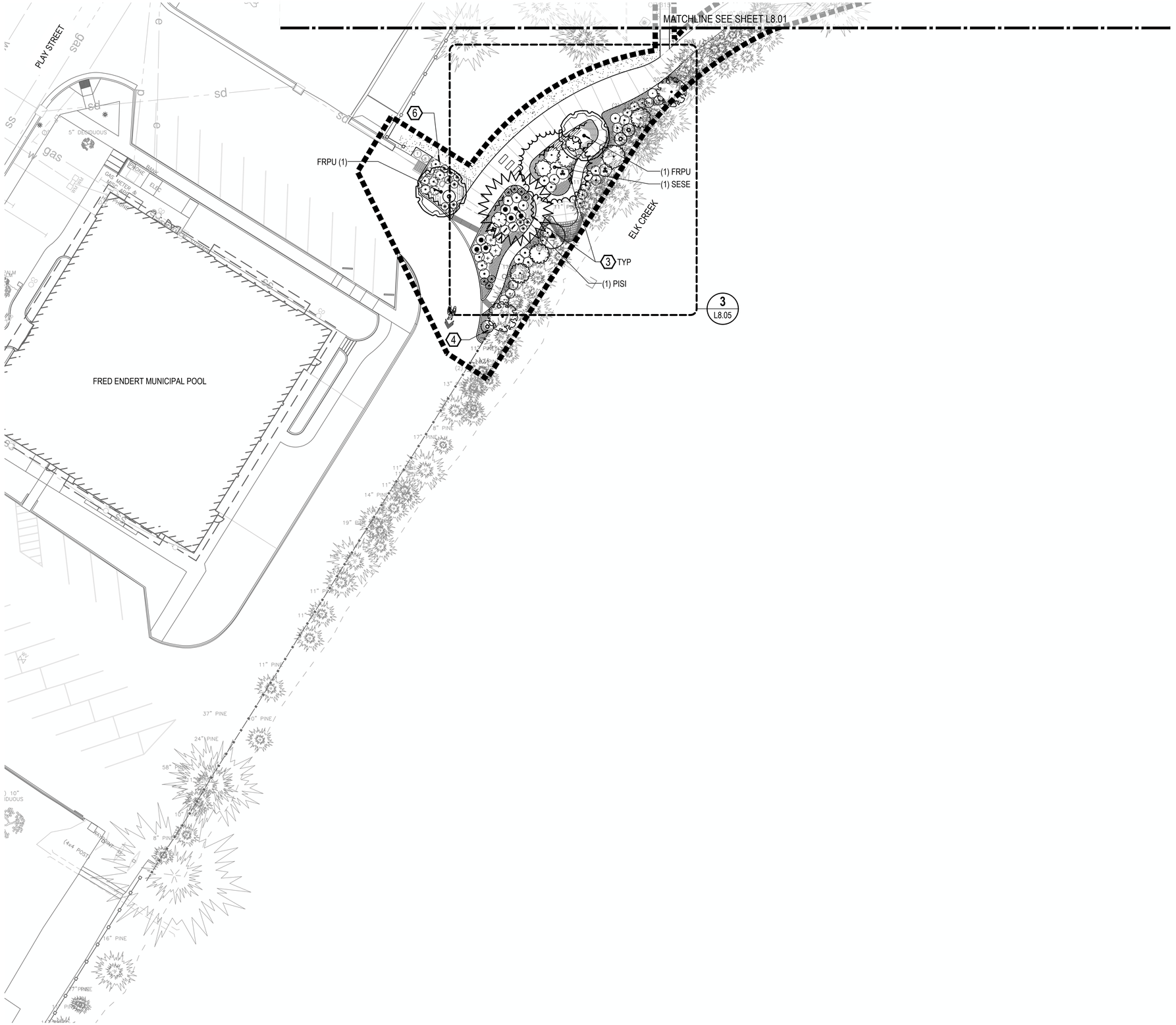

LEGEND

SYMBOL	ITEM
CONIFER DECIDUOUS	EXISTING TREES
	FILTER STRIP - SHADE MIX
	SEEDED LAWN
	MULCH

PLANTING SHEET NOTES

1. SEE SHEET L8.00 FOR PLANTING SCHEDULE AND NOTES.
2. SEE SHEET L9.08 FOR PLANTING DETAILS.
3. LIMIT OF WORK LINE INDICATED FOR REFERENCE ONLY.

X PLANTING KEY NOTES

1. MULCH RING FOR PROPOSED TREES, AS SHOWN.
2. MULCH RING FOR EXISTING TREES, AS SHOWN.
3. PROPOSED ROOT BARRIER ALONG EDGE OF PAVING ONLY.
4. MULCH PATTERN NOT SHOWN IN PLANT BEDS, SEE DETAILS.
5. APPLY MULCH AT EDGE OF BUILDING.
6. SHOVEL CUT EDGE CONDITION ALONG PLANT BED.
7. FILTER STRIP - SHADE MIX.

KEY MAP

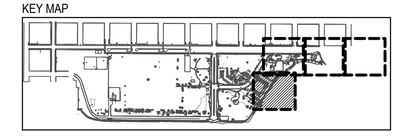

NORTH

SCALE: 1" = 20'-0"

0' 10' 20' 40'

GREEN WORKS
LANDSCAPE ARCHITECTURE
ENVIRONMENTAL DESIGN
110 SE Main St., Suite 100
Portland, OR 97214
Ph: 503 222 5612
Fax: 503 222 2283
Email: info@greenworkspc.com

LICENSED LANDSCAPE ARCHITECT
BENJAMIN JOHNSON 6183
Signature
Renewal Date
Date
STATE OF CALIFORNIA

VERIFY SCALE: DRAWINGS ARE TO SCALE IF BAR MEASURES 1"
0" 1/2" 1"

CITY OF CRESCENT CITY CALIFORNIA 1854

Project:
Beachfront Park
Clean CA
City of Crescent City
377 J STREET
CRESCENT CITY, CA, 95531
707-464-9506
ewier@crescentcity.org

Submittal: BID SET

Sheet Title:
Planting Plan

© GREENWORKS, P.C.
2024, ALL RIGHTS RESERVED

THESE DRAWINGS ARE THE PROPERTY OF GREENWORKS, P.C., AND ARE NOT TO BE USED OR REPRODUCED IN ANY MANNER, EXCEPT WITH THE PRIOR WRITTEN PERMISSION OF GREENWORKS, P.C.

Date:	05/09/2025
Revisions:	
Drawn By:	SS/MM/PG
Checked By:	BJ/GM
Job No.	220065
Approved:	BJ

L8.04

Sheet No. 46 of 63

G:\PROJECTS\220065.1_CRESCENT_CITY_BEACHFRONT_PARK\02_CLEAN_CA\02_PRODUCTION\01_CAD\01_PLOT_SHEETS\220065_PLNT_CCA.DWG

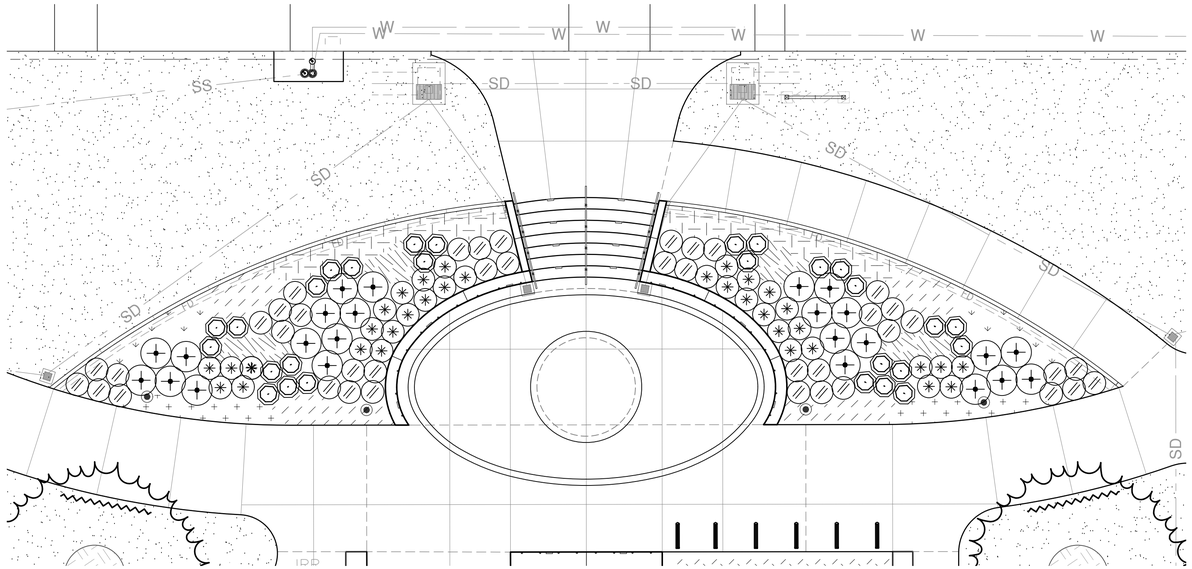

1 DISCOVERY CENTER ENTRY

SCALE: 1" = 10'-0"
0' 5' 10' 20' NORTH

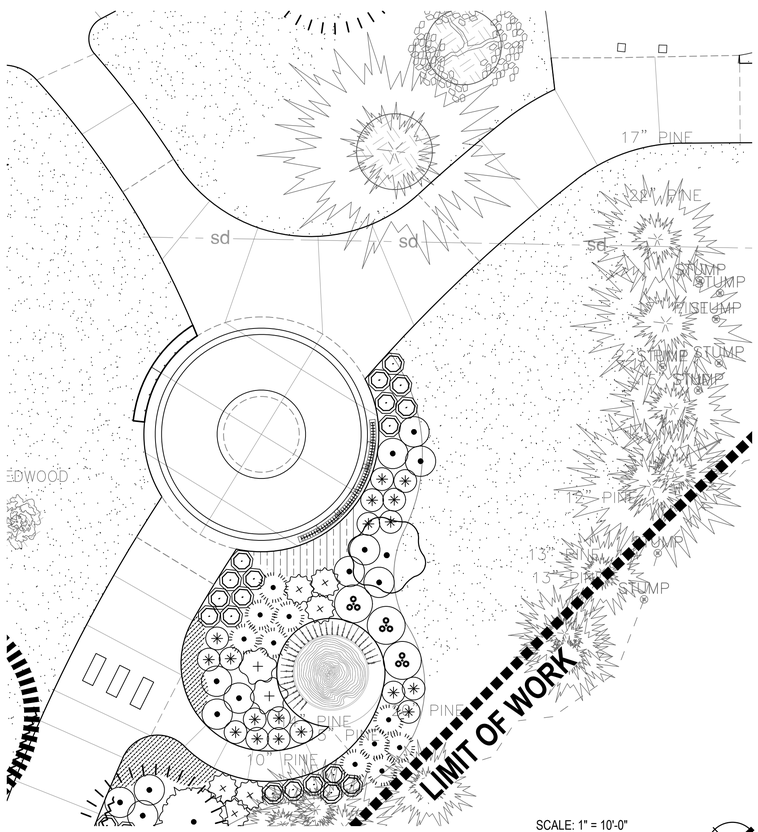

2 TOLOWA WALK ENTRY

SCALE: 1" = 10'-0"
0' 5' 10' 20' NORTH

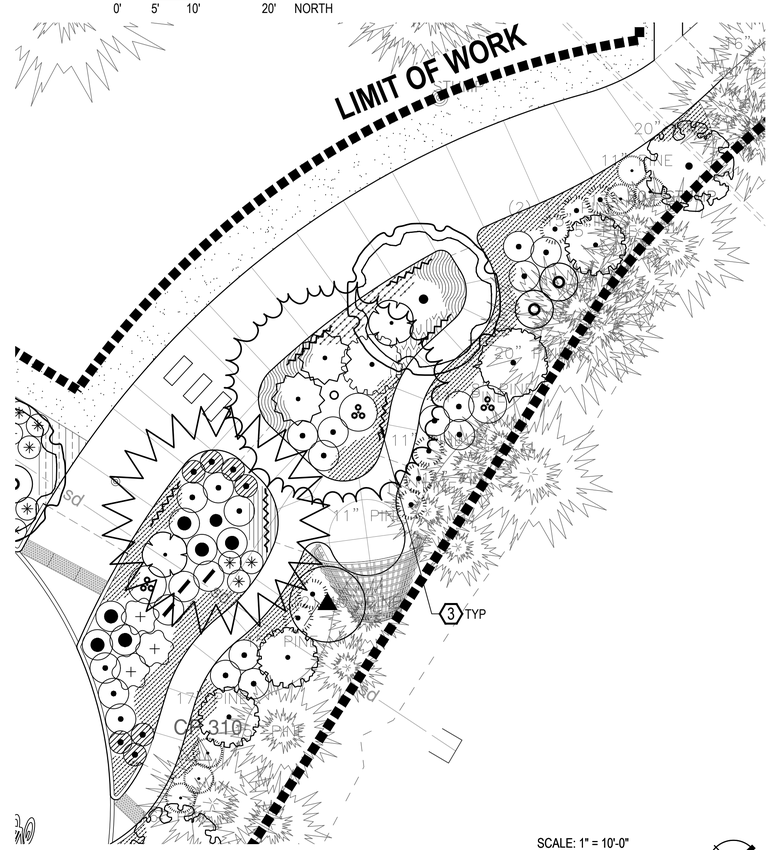

3 BURDEN BASKET INTERPRETIVE NODE

SCALE: 1" = 10'-0"
0' 5' 10' 20' NORTH

LEGEND

SYMBOL	ITEM
CONIFER DECIDUOUS	EXISTING TREES
	FILTER STRIP - SHADE MIX
	SEEDED LAWN
	MULCH

PLANTING SHEET NOTES

1. SEE SHEET L8.00 FOR PLANTING SCHEDULE AND NOTES.
2. SEE SHEET L9.08 FOR PLANTING DETAILS.
3. LIMIT OF WORK LINE INDICATED FOR REFERENCE ONLY.

(X) PLANTING KEY NOTES

1. MULCH RING FOR PROPOSED TREES, AS SHOWN.
2. MULCH RING FOR EXISTING TREES, AS SHOWN.
3. PROPOSED ROOT BARRIER ALONG EDGE OF PAVING ONLY.
4. MULCH PATTERN NOT SHOWN IN PLANT BEDS, SEE DETAILS.
5. APPLY MULCH AT EDGE OF BUILDING.
6. SHOVEL CUT EDGE CONDITION ALONG PLANT BED.
7. FILTER STRIP - SHADE MIX.

GREEN WORKS
LANDSCAPE ARCHITECTURE
ENVIRONMENTAL DESIGN
110 SE Main St., Suite 100
Portland, OR 97214
Ph: 503 222 5612
Fax: 503 222 2283
Email: info@greenworkspc.com

LICENSED LANDSCAPE ARCHITECT
BENJAMIN JOHNSON 6183
Signature
Renewal Date
Date
STATE OF CALIFORNIA

VERIFY SCALE: DRAWINGS ARE TO SCALE IF BAR MEASURES 1"
0" 1/2" 1"

CITY OF CRESCENT CITY CALIFORNIA 1854

Project:
Beachfront Park
Clean CA
City of Crescent City
377 J STREET
CRESCENT CITY, CA, 95531
707-464-9506
ewier@crescentcity.org

Submittal: BID SET
Sheet Title:
Planting Plan Enlargements

© GREENWORKS, P.C. 2024, ALL RIGHTS RESERVED
THESE DRAWINGS ARE THE PROPERTY OF GREENWORKS, P.C., AND ARE NOT TO BE USED OR REPRODUCED IN ANY MANNER, EXCEPT WITH THE PRIOR WRITTEN PERMISSION OF GREENWORKS, P.C.

Date:	05/09/2025
Revisions:	
Drawn By:	SS/MM/PG
Checked By:	BJ/GM
Job No.	220065
Approved:	BJ

L8.05
Sheet No. 47 of 63

G:\PROJECTS\220065 I_CRESCENT_CITY_BEACHFRONT_PARK\02_CLEAN_CA\02_PRODUCTION\03_CAD\01_PLOT_SHEETS\220065_PLNT_CCA.DWG

NOTES:
1. CONCRETE FINISH VARIES. SEE PLANS AND SPECIFICATIONS.
2. USE A THICKENED EDGE WHERE CONCRETE IS ADJACENT TO ANY PLANTING AREAS, LAWN, AS INDICATED ON DRAWINGS, AND WHERE THERE IS A DIFFERENCE OF 3" OR GREATER FROM TOP OF PAVING TO FINISH GRADE.

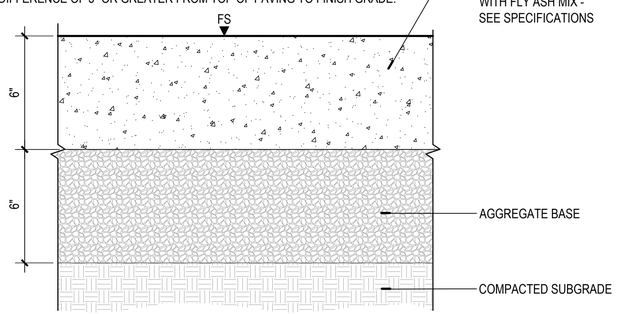

1 CONCRETE PAVING - VEHICULAR
SECTION

SCALE: 3" = 1'-0"
0" 1" 2" 4"

NOTES:
1. CONCRETE FINISH VARIES. SEE PLANS AND SPECIFICATIONS.
2. USE A THICKENED EDGE WHERE CONCRETE IS ADJACENT TO ANY PLANTING AREAS, LAWN, AS INDICATED ON DRAWINGS, AND WHERE THERE IS A DIFFERENCE OF 3" OR GREATER FROM TOP OF PAVING TO FINISH GRADE.

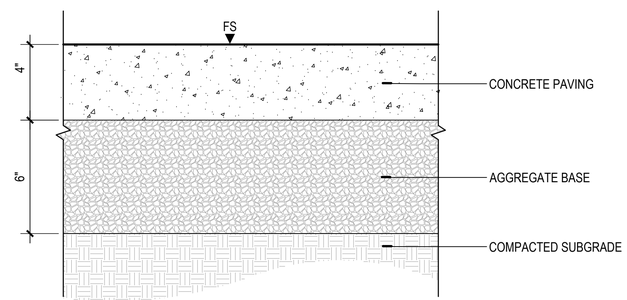

2 CONCRETE PAVING - PEDESTRIAN
SECTION

SCALE: 3" = 1'-0"
0" 1" 2" 4"

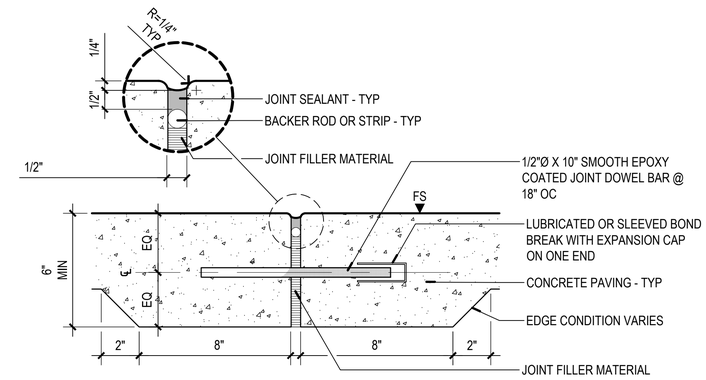

3 DOWELED EXPANSION JOINT
SECTION

NOT TO SCALE

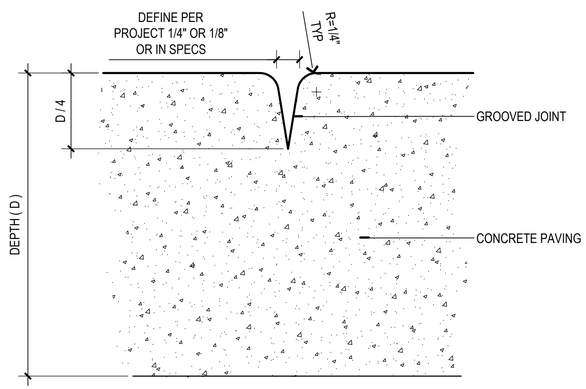

4 CONTRACTION JOINT
SECTION

NOT TO SCALE

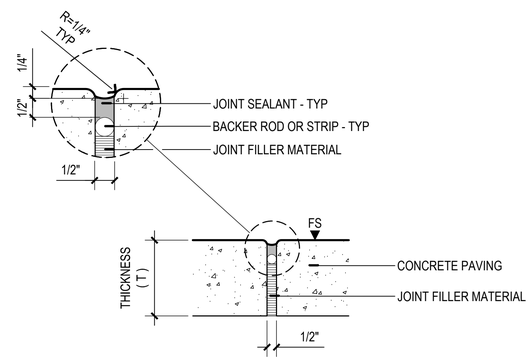

5 ISOLATION JOINT
SECTION

NOT TO SCALE

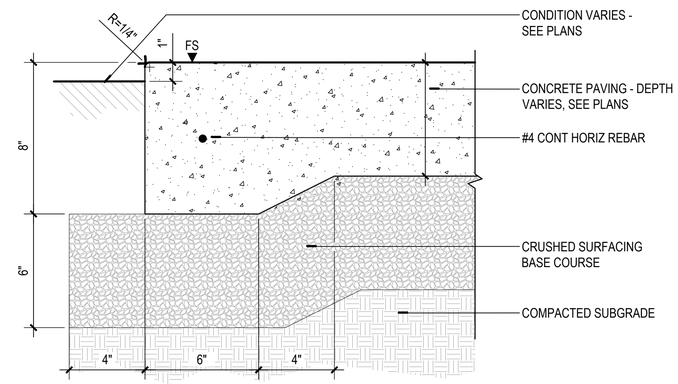

6 THICKENED EDGE - TYPE 1
SECTION

SCALE: 3" = 1'-0"
0" 1" 2" 4"

7 DETAL NOT USED

NOT TO SCALE

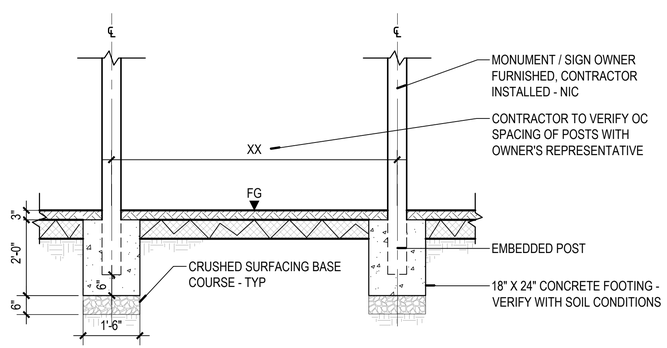

8 MONUMENT SIGN FOOTING
SECTION

SCALE: 1/2" = 1'-0"
0" 6" 12" 24"

NOTE:
CONCRETE FINISH VARIES. SEE PLANS AND SPECIFICATIONS.

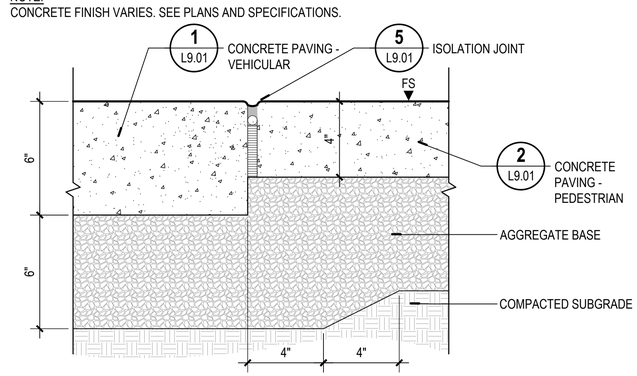

9 CONCRETE PAVING EDGE CONDITION
SECTION

SCALE: 3" = 1'-0"
0" 1" 2" 4"

GREEN WORKS
LANDSCAPE ARCHITECTURE
ENVIRONMENTAL DESIGN
110 SE Main St., Suite 100
Portland, OR 97214
Ph: 503 222 5612
Fax: 503 222 2283
Email: info@greenworkspc.com

LICENSED LANDSCAPE ARCHITECT
BENJAMIN JOHNSON 6362
Signature
Renewal Date
Date
STATE OF CALIFORNIA

VERIFY SCALE: DRAWINGS ARE TO SCALE IF BAR MEASURES 1"
0" 1/2" 1"

CITY OF CRESCENT CITY CALIFORNIA 1854

Project:
Beachfront Park
Clean CA
City of Crescent City
377 J STREET
CRESCENT CITY, CA, 95531
707-464-9506
ewier@crescentcity.org

Submittal: BID SET

Sheet Title:
Site Details

© GREENWORKS, P.C.
2024, ALL RIGHTS RESERVED

THESE DRAWINGS ARE THE PROPERTY OF GREENWORKS, P.C., AND ARE NOT TO BE USED OR REPRODUCED IN ANY MANNER, EXCEPT WITH THE PRIOR WRITTEN PERMISSION OF GREENWORKS, P.C.

Date:	05/09/2025
Revisions:	
Drawn By:	SS/MM/PG
Checked By:	BJ/GM
Job No.	220065
Approved:	BJ

L9.01

G:\PROJECTS\220065 1_CRESCENT_CITY_BEACHFRONT_PARK\02_CLEAN_CA\02_PRODUCTION\01_CAD\01_PLOT_SHEETS\220065_DETL_CCA.DWG

NOTES:
1. PAVING SQUARE OFF APPLIES TO CONDITIONS WHERE PAVING RADIUS IS TANGENTIAL TO EXISTING CONCRETE PAVING.
2. PAVING RADIUS VARIES, SEE PLANS.

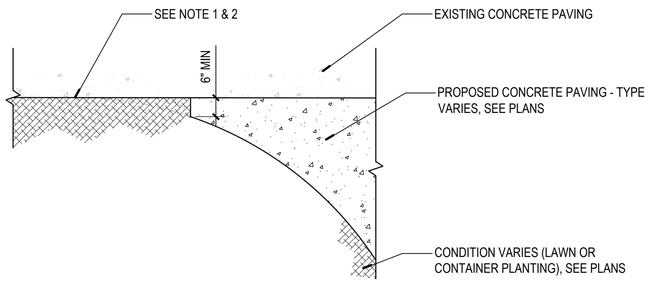

1 TYPICAL PAVING SQUARE OFF
PLAN

SCALE: 1/2" = 1'-0"
0" 6" 12" 24"

NOTE:
SEE SPECIFICATIONS.

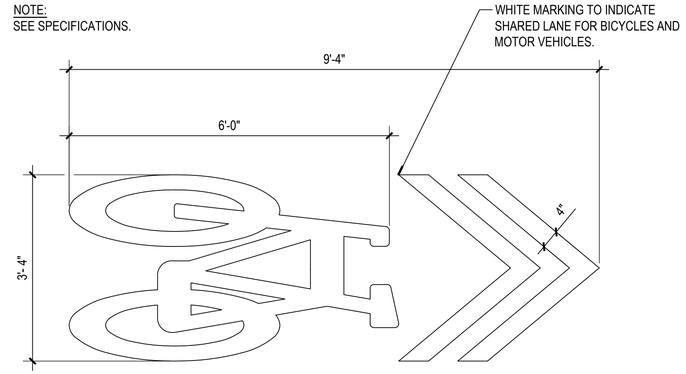

2 PAVEMENT STRIPING
PLAN

NOT TO SCALE

NOTES:
1. STENCILS TO BE PLACED PARALLEL TO ONE ANOTHER.
2. STENCILS TO BE PLACED ON THE CENTERLINE OF THE INTERSECTING PATH - TYP.
3. EXPOSED AGGREGATE PAVING THICKNESS VARIES, SEE PLANS.

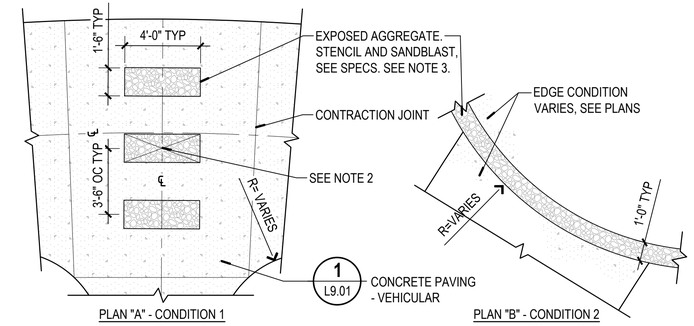

3 SANDBLASTED STENCIL
PLAN

SCALE: 1/4" = 1'-0"
0' 1' 2' 4'

NOTES:
1. CONCRETE FINISH VARIES. SEE PLANS AND SPECIFICATIONS.
2. CONCRETE THICKNESS VARIES. SEE PLANS AND SPECIFICATIONS.
3. INSTALLATION OF DOWELED EXPANSION JOINTS AT CONCRETE - LITHOCRETE EDGE CONDITION WILL REQUIRE COORDINATION WITH LITHOCRETE INSTALLER.
4. AGGREGATE BASE IS IN CONTRACT, LITHOCRETE WITH LITHOMOSAIC IS N.I.C.

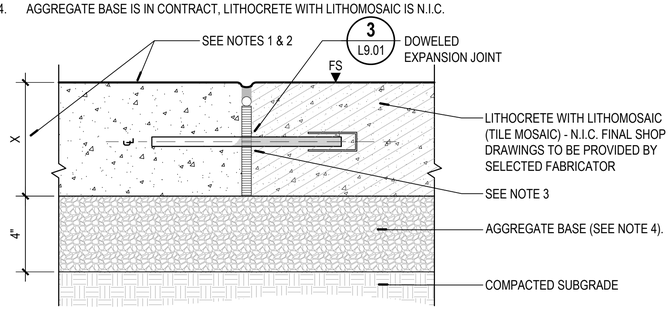

4 LITHOMOSAIC PAVING EDGE CONDITION
SECTION

SCALE: 3" = 1'-0"
0" 1" 2" 4"

NOTES:
1. SPAN ENTIRE WIDTH OF RAMP OR WALK .
2. PROVIDE MINIMUM CONCRETE COVERAGE AT TILE EDGE PER MANUFACTURER'S INSTRUCTIONS.
3. TACTILE WARNING TO MEET STATE AND LOCAL CODES.

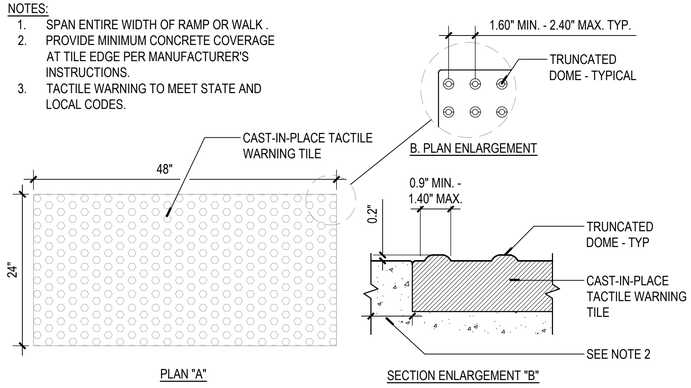

5 TACTILE WARNING TILES
PLAN

NOT TO SCALE

NOTES:
1. PROVIDE DOWELED EXPANSION JOINTS WITH SEALANT AT 40' OC MIN.
2. PROVIDE CONTRACTION JOINTS TRANSVERSELY AT 12' OC MIN (EQUALLY SPACED).

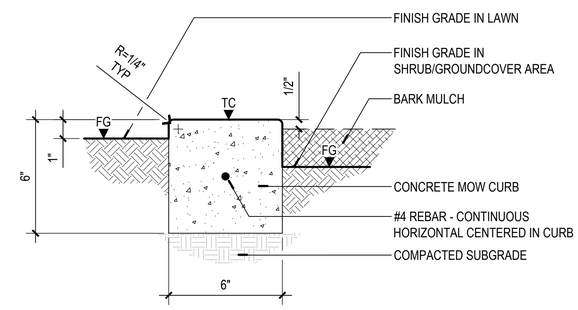

6 MOW CURB
SECTION

NOT TO SCALE

NOTE:
PROVIDE CONTRACTION JOINTS TRANSVERSELY ALONG CONCRETE EDGE RESTRAINT A MINIMUM OF 12' AND ISOLATION JOINTS A MINIMUM OF 40'.

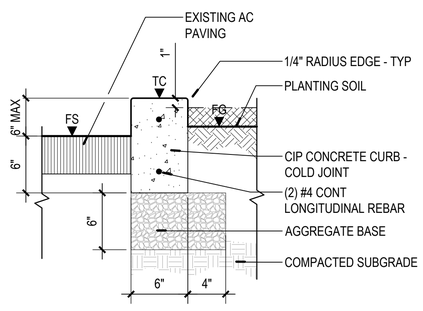

7 CONCRETE CURB - RAISED TYPE 1
SECTION

NOT TO SCALE

GREEN WORKS
LANDSCAPE ARCHITECTURE
ENVIRONMENTAL DESIGN
110 SE Main St., Suite 100
Portland, OR 97214
Ph: 503 222 5612
Fax: 503 222 2283
Email: info@greenworkspc.com

LICENSED LANDSCAPE ARCHITECT
BENJAMIN JOHNSON 6192
Signature
Renewal Date
Date
STATE OF CALIFORNIA

VERIFY SCALE: DRAWINGS ARE TO SCALE IF BAR MEASURES 1"
0" 1/2" 1"

CITY OF CRESCENT CITY CALIFORNIA 1854

Project:
Beachfront Park Clean CA

City of Crescent City
377 J STREET
CRESCENT CITY, CA, 95531
707-464-9506
ewier@crescentcity.org

Submittal: BID SET

Sheet Title:
Site Details

© GREENWORKS, P.C.
2024, ALL RIGHTS RESERVED
THESE DRAWINGS ARE THE PROPERTY OF GREENWORKS, P.C., AND ARE NOT TO BE USED OR REPRODUCED IN ANY MANNER, EXCEPT WITH THE PRIOR WRITTEN PERMISSION OF GREENWORKS, P.C.

Date:	05/09/2025
Revisions:	
Drawn By:	SS/MM/PG
Checked By:	BJ/GM
Job No.	220065
Approved:	BJ

L9.02

G:\PROJECTS\220065-1_CRESCENT_CITY_BEACHFRONT_PARK\02_CLEAN_CA\02_PRODUCTION\01_CAD\01_PLOT_SHEETS\220065_DETL_CCA.DWG

NOTE:
PROVIDE CONTRACTION JOINTS TRANSVERSELY ALONG CONCRETE EDGE RESTRAINT A MINIMUM OF 12' AND ISOLATION JOINTS A MINIMUM OF 40'.

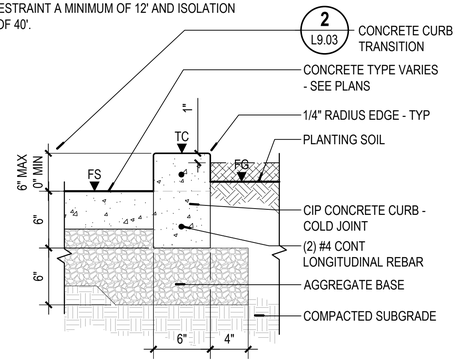

1 CONCRETE CURB - RAISED TYPE 2
SECTION — NOT TO SCALE

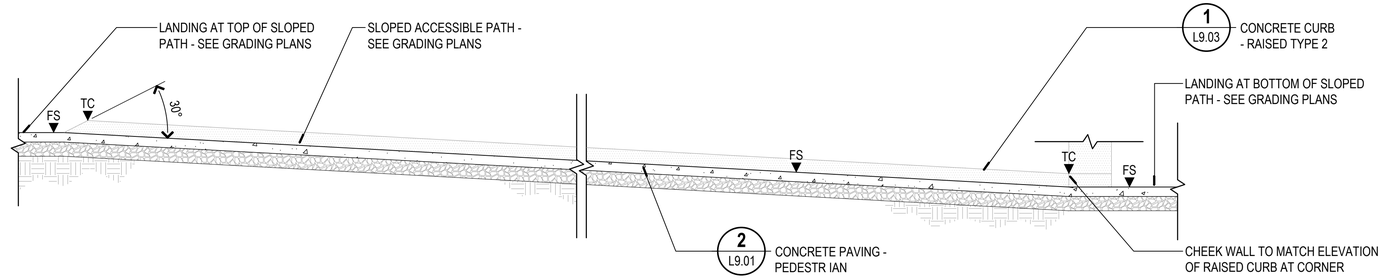

2 CONCRETE CURB TRANSITION
SECTION — NOT TO SCALE

NOTES:
1. MAXIMUM 11% ALGEBRAIC DIFFERENCE ALLOWED FROM GUTTER SLOPE THROUGH RAMP SLOPE GRADIENTS. UTILIZATION OF MAX GRADES AS INDICATED WILL EXCEED 11% REQUIREMENT. PROVIDE 24" LEVEL TRANSITION AT RAMP BOTTOM IF ALGEBRAIC DIFFERENCE IS EXCEEDED.
2. DESIGN FOR 7.2% MAXIMUM RAMP SLOPE FOR CONSTRUCTION TOLERANCE.
3. REFER TO CONCRETE PAVING DETAIL FOR REINFORCEMENT REQUIREMENTS.
4. TACTILE WARNING TO MEET STATE AND LOCAL REQUIREMENTS.

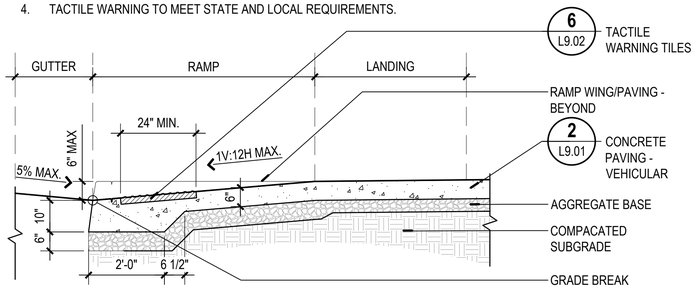

3 CURB RAMP
SECTION — SCALE: 1/2" = 1'-0" (0" 6" 12" 24")

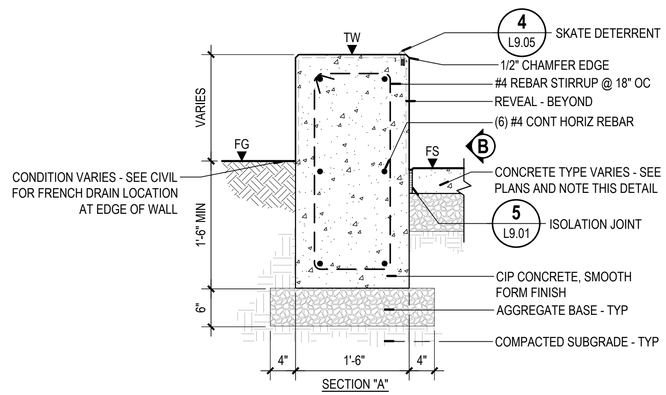

NOTES:
1. DETAIL INDICATES CONCRETE PAVING CONDITION. MATERIAL VARIES, SEE PLANS.
2. CONTRACTOR SHALL SUBMIT SHOP DRAWINGS FOR APPROVAL PRIOR TO FABRICATION AND INSTALLATION.

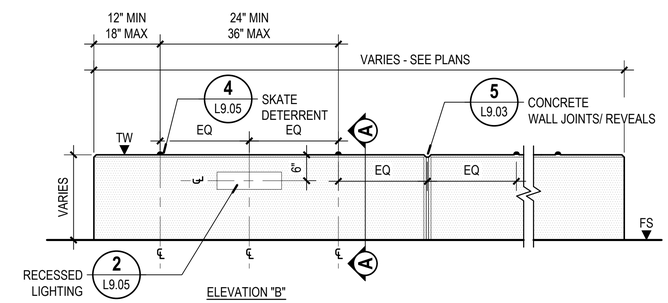

4 CONCRETE SEATWALL
SECTION / ELEVATION — NOT TO SCALE

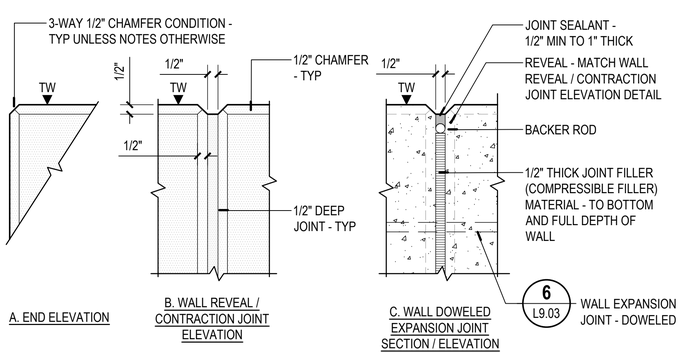

5 CONCRETE WALL JOINTS / REVEALS
ELEVATION / SECTION — NOT TO SCALE

NOTE:
PROVIDE DOWELED WALL EXPANSION JOINTS ALONG WALL SECTIONS AT A MAXIMUM OF EVERY 50' AND AT WALL DIRECTIONAL CHANGES.

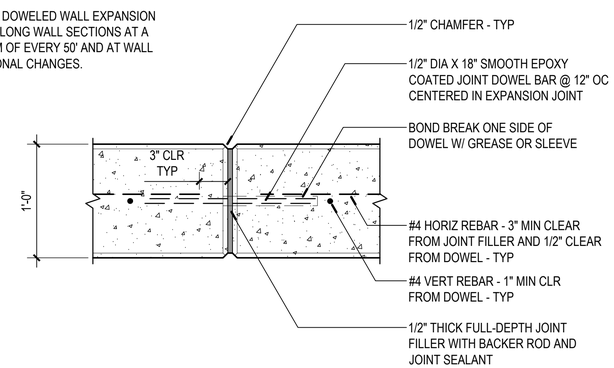

6 WALL EXPANSION JOINT - DOWELED
PLAN / SECTION — SCALE: 1 1/2" = 1'-0" (0" 2" 4" 8")

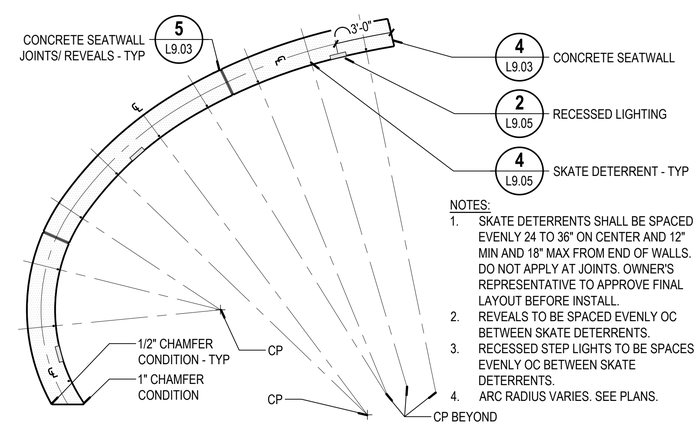

NOTES:
1. SKATE DETERRENTS SHALL BE SPACED EVENLY 24 TO 36" ON CENTER AND 12" MIN AND 18" MAX FROM END OF WALLS. DO NOT APPLY AT JOINTS. OWNER'S REPRESENTATIVE TO APPROVE FINAL LAYOUT BEFORE INSTALL.
2. REVEALS TO BE SPACED EVENLY OC BETWEEN SKATE DETERRENTS.
3. RECESSED STEP LIGHTS TO BE SPACES EVENLY OC BETWEEN SKATE DETERRENTS.
4. ARC RADIUS VARIES. SEE PLANS.

7 CONCRETE SEATWALL LAYOUT
PLAN — SCALE: 1/4" = 1'-0" (0' 1' 2' 4')

GREEN WORKS
LANDSCAPE ARCHITECTURE
ENVIRONMENTAL DESIGN
110 SE Main St., Suite 100
Portland, OR 97214
Ph: 503 222 5612
Fax: 503 222 2283
Email: info@greenworkspc.com

LICENSED LANDSCAPE ARCHITECT — BENJAMIN JOHNSON 6183 — Signature — Renewal Date — Date — STATE OF CALIFORNIA

VERIFY SCALE: DRAWINGS ARE TO SCALE IF BAR MEASURES 1" (0" 1/2" 1")

CITY OF CRESCENT CITY CALIFORNIA 1854

Project: Beachfront Park Clean CA
City of Crescent City
377 J STREET
CRESCENT CITY, CA, 95531
707-464-9506
ewier@crescentcity.org

Submittal: BID SET
Sheet Title: Site Details

© GREENWORKS, P.C. 2024, ALL RIGHTS RESERVED
THESE DRAWINGS ARE THE PROPERTY OF GREENWORKS, P.C., AND ARE NOT TO BE USED OR REPRODUCED IN ANY MANNER, EXCEPT WITH THE PRIOR WRITTEN PERMISSION OF GREENWORKS, P.C.

Date:	05/09/2025
Revisions:	
Drawn By:	SS/MM/PG
Checked By:	BJ/GM
Job No.	220065
Approved:	BJ

L9.03
Sheet No. 50 of 63

G:\PROJECTS\220065-1_CRESCENT_CITY_BEACHFRONT_PARK\02_CLEAN_CA\02_PRODUCTION\01_CAD\01_PLOT_SHEETS\220065_DETL_CCA.DWG

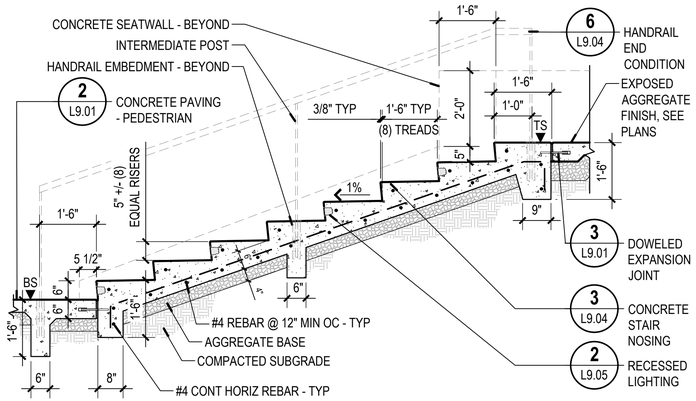

1 CONCRETE STAIRS
SECTION

NOT TO SCALE

NOTES:
1. PROVIDE HANDRAIL SHOP DRAWINGS FOR APPROVAL BY OWNER'S REPRESENTATIVE. INDICATE ALL DIMENSIONS, MATERIALS, FINISHES, AND EDGE TREATMENTS.
2. WALL JOINTS / REVEALS NOT SHOWN.

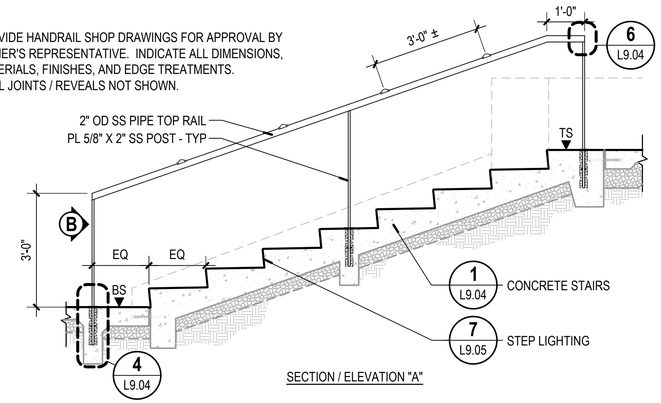

SECTION / ELEVATION "A"

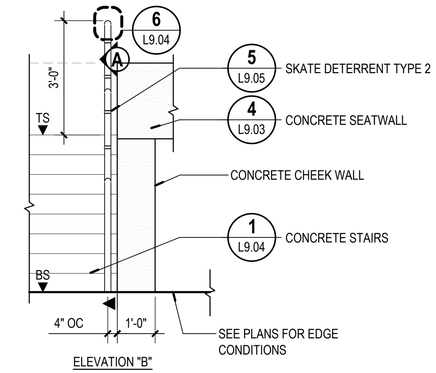

ELEVATION "B"

2 HANDRAIL AT CONCRETE STAIRS
SECTION

NOT TO SCALE

NOTE:
STAIR NOSING TO BE CONTINUOUS ALONG ENTIRE LENGTH OF EACH STAIR TREAD.

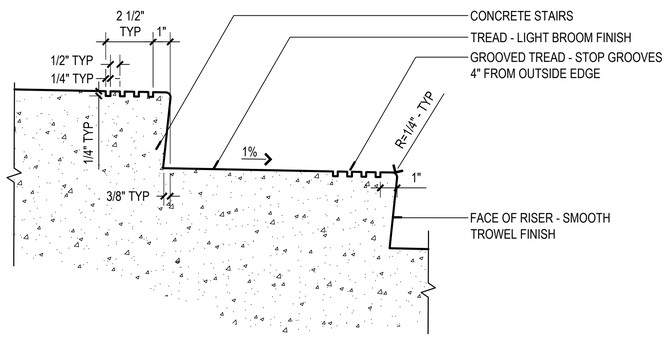

3 CONCRETE STAIR NOSING
SECTION

NOT TO SCALE

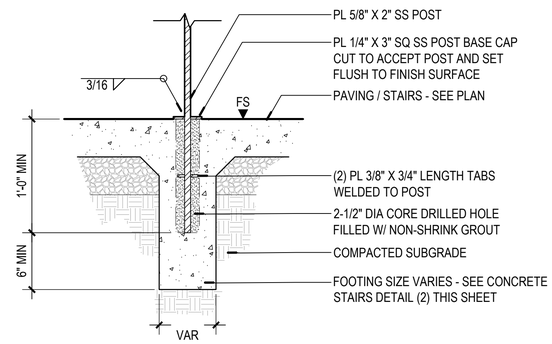

4 STAIR HANDRAIL FOOTING / EMBEDMENT
SECTION

SCALE: 1 1/2" = 1'-0"
0" 2" 4" 8"

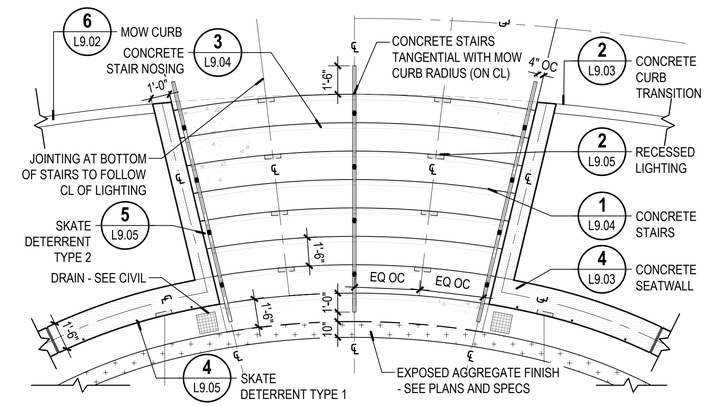

5 CONCRETE STAIRS LAYOUT
SECTION

NOT TO SCALE

NOTE:
1. SEAMLESSLY GRIND WELD JOINTS SMOOTH BETWEEN POST AND TOP RAIL.

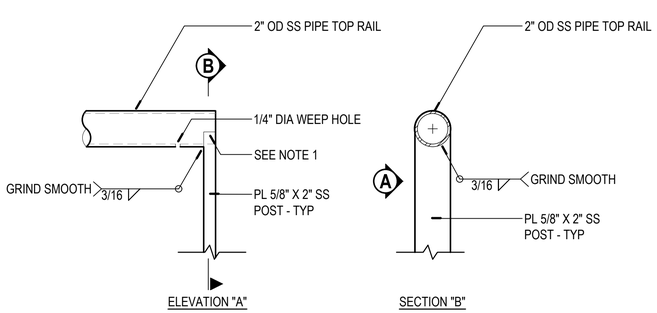

ELEVATION "A" SECTION "B"

6 HANDRAIL END CONNECTION
SECTION / ELEVATION

NOT TO SCALE

GREEN WORKS
LANDSCAPE ARCHITECTURE
ENVIRONMENTAL DESIGN
110 SE Main St., Suite 100
Portland, OR 97214
Ph: 503 222 5612
Fax: 503 222 2283
Email: info@greenworkspc.com

LICENSED LANDSCAPE ARCHITECT
BENJAMIN JOHNSON 6182
Signature
Renewal Date
Date
STATE OF CALIFORNIA

VERIFY SCALE: DRAWINGS ARE TO SCALE IF BAR MEASURES 1"
0" 1/2" 1"

CITY OF CRESCENT CITY CALIFORNIA 1854

Project:
Beachfront Park Clean CA
City of Crescent City
377 J STREET
CRESCENT CITY, CA, 95531
707-464-9506
ewier@crescentcity.org

Submittal: BID SET

Sheet Title:
Site Details

© GREENWORKS, P.C.
2024, ALL RIGHTS RESERVED

THESE DRAWINGS ARE THE PROPERTY OF GREENWORKS, P.C., AND ARE NOT TO BE USED OR REPRODUCED IN ANY MANNER, EXCEPT WITH THE PRIOR WRITTEN PERMISSION OF GREENWORKS, P.C.

Date:	05/09/2025
Revisions:	
Drawn By:	SS/MM/PG
Checked By:	BJ/GM
Job No.	220065
Approved:	BJ

L9.04

Sheet No. 51 of 63

G:\PROJECTS\220065 I. CRESCENT CITY_BEACHFRONT_PARK\02_CLEAN_CA\02_PRODUCTION\01_CAD\01_PLOT_SHEETS\220065_DETL_CCA.DWG

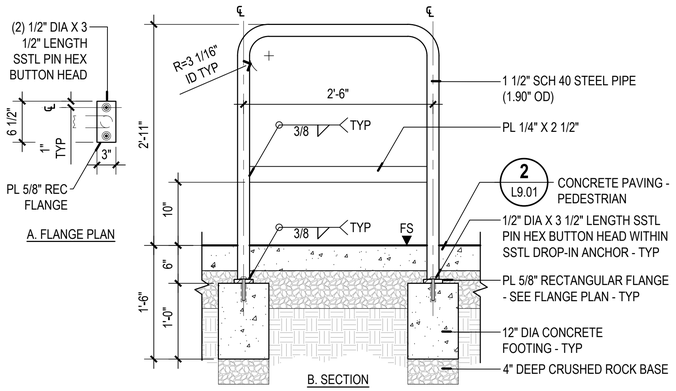

1 BICYCLE RACK

SECTION / PLAN

SCALE: 1" = 1'-0

0" 3" 6" 12"

NOTES:
1. INSTALL PER THE MANUFACTURER'S INSTRUCTIONS.
2. MANUFACTURER DIMENSIONS PROVIDED IN MILLIMETERS. CONFIRM DIMENSIONS PRIOR TO CONSTRUCTION.

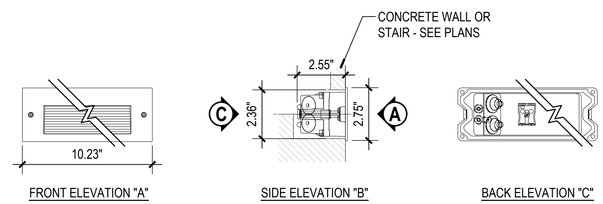

2 RECESSED LIGHTING

ELEVATION

NOT TO SCALE

NOTE:
PRODUCT SHOWN IS ELKAY "EZH20 OUTDOOR BOTTLE FILLER WITH DRINKING FOUNTAIN AND PET STATION". PRODUCT #LK4420BF1UDB. INSTALL PER THE MANUFACTURER'S INSTRUCTIONS.

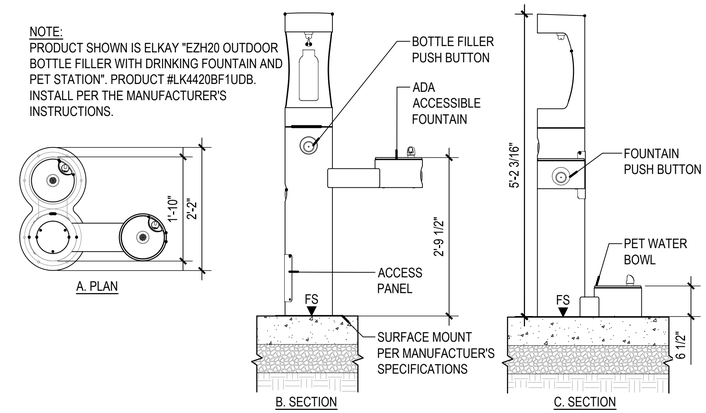

3 ACCESSIBLE DRINKING FOUNTAIN

PLAN/ SECTION

NOT TO SCALE

NOTES:
1. SKATE DETERRENT LOCATIONS INDICATED ON THE PLANS.
2. INSTALL PER THE MANUFACTURER'S INSTRUCTIONS.

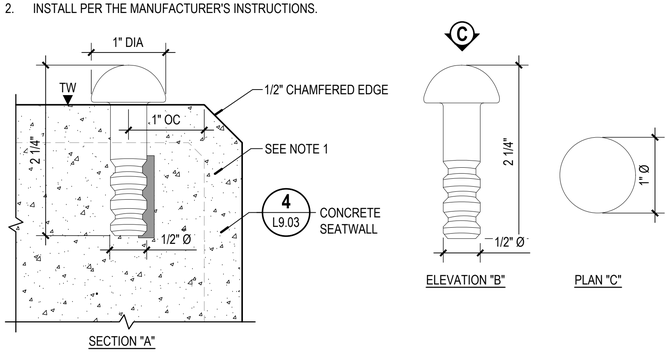

4 SKATE DETERRENT TYPE 1

SECTION / ELEVATION / PLAN

SCALE: 1" = 1"

0" 1/4" 1/2" 1"

NOTES:
1. SPACE SKATE DETERRENTS 3' OC MAX ALONG HANDRAIL. SEE PLANS.
2. INSTALL PER THE MANUFACTURER'S INSTRUCTIONS.

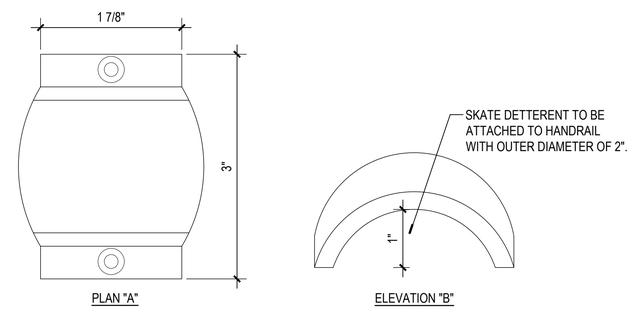

5 SKATE DETERRENT TYPE 2

ELEVATION / PLAN

SCALE: 1" = 1"

0" 1/4" 1/2" 1"

NOTE:
VERIFY BOLLARD BASE DIMENSION TO DETERMINE DIAMETER OF CONCRETE FOOTING, AND INSTALL PER THE MANUFACTURER'S INSTRUCTIONS.

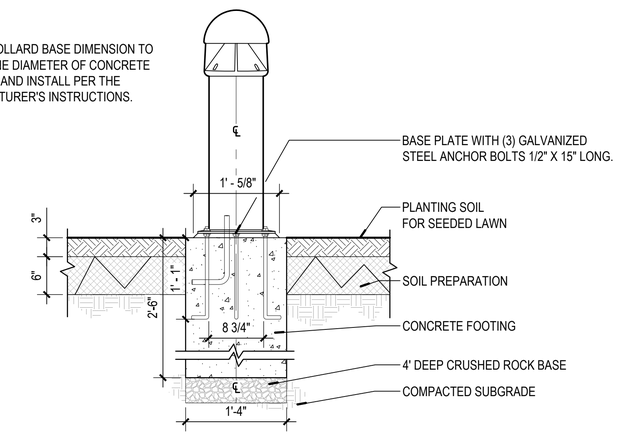

6 BOLLARD - TYPE 1

SECTION

NOT TO SCALE

NOTE:
INSTALL PER THE MANUFACTURER'S INSTRUCTIONS.

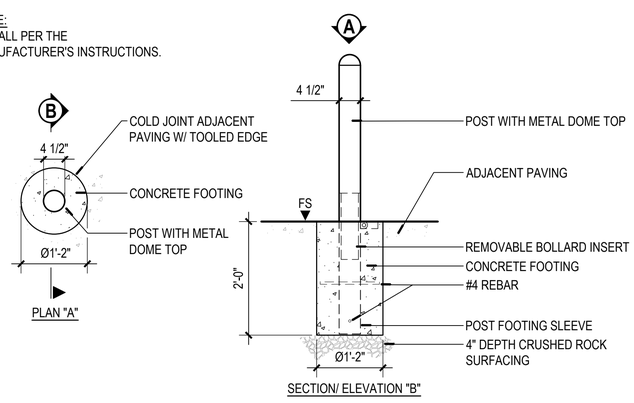

7 REMOVABLE BOLLARD

PLAN / SECTION-ELEVATION

NOT TO SCALE

GREEN WORKS
LANDSCAPE ARCHITECTURE
ENVIRONMENTAL DESIGN
110 SE Main St., Suite 100
Portland, OR 97214
Ph: 503 222 5612
Fax: 503 222 2283
Email: info@greenworkspc.com

LICENSED LANDSCAPE ARCHITECT BENJAMIN JOHNSON 6192 Signature Renewal Date Date STATE OF CALIFORNIA

VERIFY SCALE: DRAWINGS ARE TO SCALE IF BAR MEASURES 1"
0" 1/2" 1"

CITY OF CRESCENT CITY CALIFORNIA 1854

Project:
Beachfront Park Clean CA

City of Crescent City
377 J STREET
CRESCENT CITY, CA, 95531
707-464-9506
ewier@crescentcity.org

Submittal: BID SET

Sheet Title:
Site Details

© GREENWORKS, P.C. 2024, ALL RIGHTS RESERVED

THESE DRAWINGS ARE THE PROPERTY OF GREENWORKS, P.C., AND ARE NOT TO BE USED OR REPRODUCED IN ANY MANNER, EXCEPT WITH THE PRIOR WRITTEN PERMISSION OF GREENWORKS, P.C.

Date:	05/09/2025
Revisions:	
Drawn By:	SS/MM/PG
Checked By:	BJ/GM
Job No.	220065
Approved:	BJ

L9.05

Sheet No. 52 of 63

G:\PROJECTS\220065 I_CRESCENT_CITY_BEACHFRONT_PARK\02_CLEAN_CA\02_PRODUCTION\01_CAD\01_PLOT_SHEETS\220065_DETL_CCA.DWG

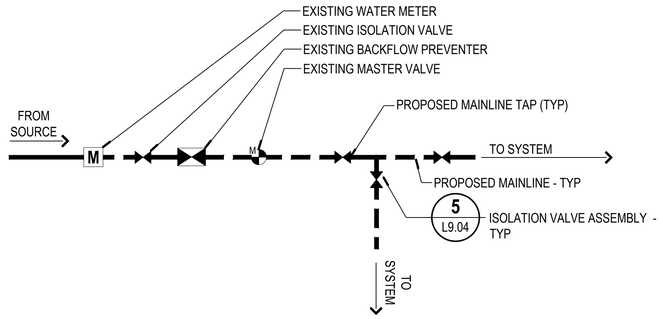

1 POINT OF CONNECTION DIAGRAM
PLAN — NOT TO SCALE

NOTES:
1. LOCATION OF QUICK COUPLER IN VALVE BOX IS SHOWN FOR CLARIFICATION ONLY. INSTALL OFF-SET FROM MAINLINE.
2. EXACT FITTING REQUIREMENTS, COMPONENT SHAPES AND SEQUENCE MAY DIFFER FROM THAT SHOWN.

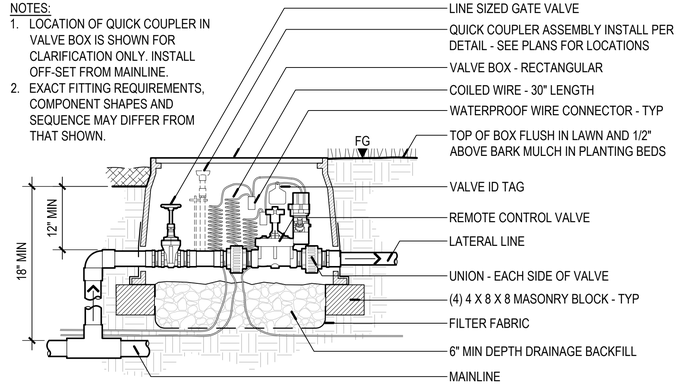

2 REMOTE CONTROL VALVE ASSEMBLY
SECTION — NOT TO SCALE

NOTES:
1. MAINLINE PIPE SHALL NOT CHANGE SIZE OR DIRECTION CLOSER THAN 10 PIPE DIAMETERS UPSTREAM OR 5 PIPE DIAMETERS DOWNSTREAM OF THE FLOW SENSOR.
2. USE 45 DEGREE ELLS TO ACHIEVE MAINLINE DEPTH ON THE DOWNSTREAM SIDE OF THE FLOW SENSOR.

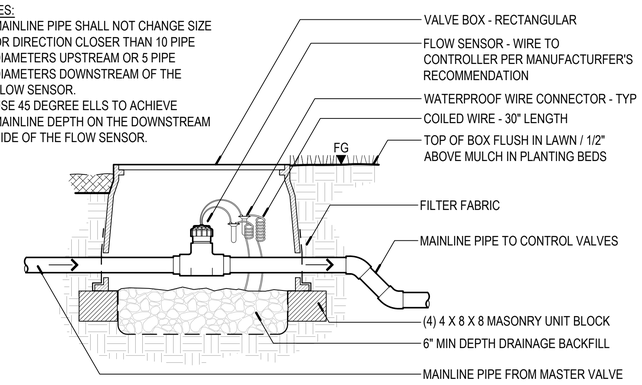

3 FLOW SENSOR
SECTION — NOT TO SCALE

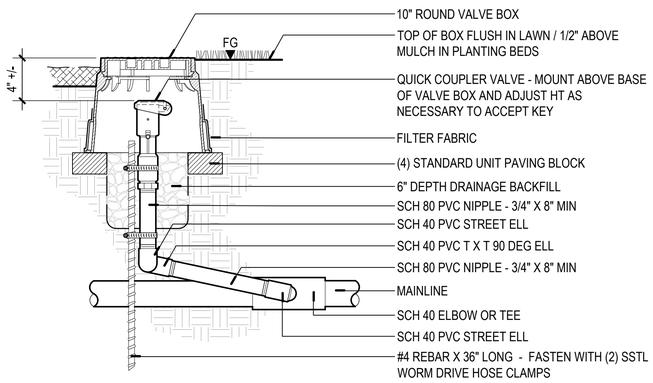

4 QUICK COUPLER VALVE ASSEMBLY
SECTION — NOT TO SCALE

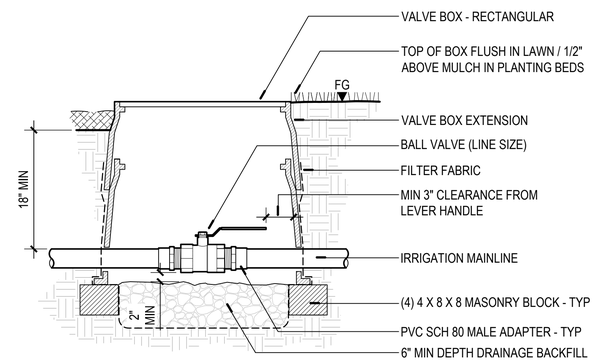

5 ISOLATION VALVE ASSEMBLY - BALL VALVE
SECTION — NOT TO SCALE

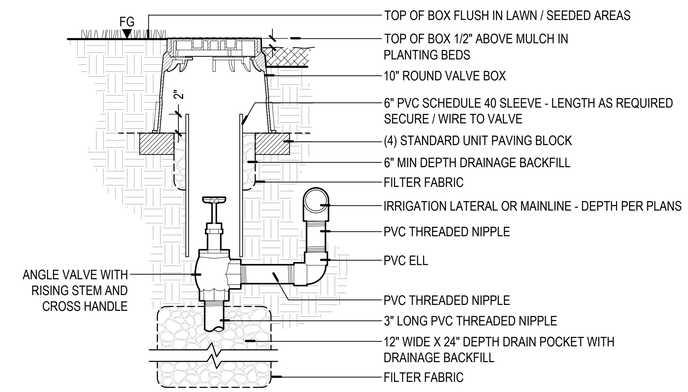

6 MANUAL DRAIN VALVE ASSEMBLY
SECTION — NOT TO SCALE

NOTE: SPRAY HEAD SHALL BE A MINIMUM OF 1" AND MAXIMUM OF 3" FROM EDGE OF WALK, PAVING, CURB, OR EDGER.

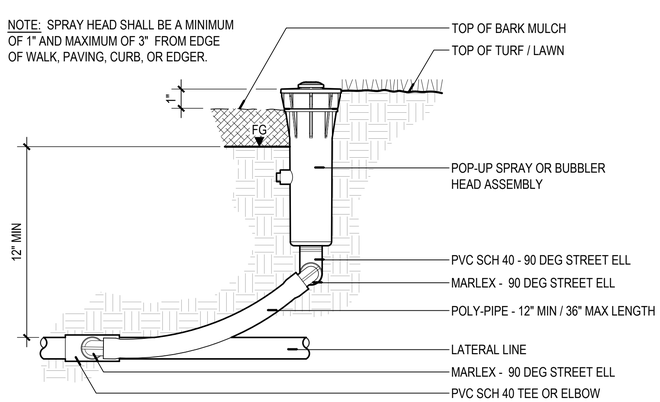

7 SPRAY OR BUBBLER HEAD - SWING JOINT ASSEMBLY
SECTION — NOT TO SCALE

GREEN WORKS
LANDSCAPE ARCHITECTURE
ENVIRONMENTAL DESIGN
110 SE Main St., Suite 100
Portland, OR 97214
Ph: 503 222 5612
Fax: 503 222 2283
Email: info@greenworkspc.com

LICENSED LANDSCAPE ARCHITECT — BENJAMIN JOHNSON — 6393 — Signature — Renewal Date — Date — STATE OF CALIFORNIA

VERIFY SCALE: DRAWINGS ARE TO SCALE IF BAR MEASURES 1"
0" 1/2" 1"

CITY OF CRESCENT CITY CALIFORNIA 1854

Project:
Beachfront Park Clean CA
City of Crescent City
377 J STREET
CRESCENT CITY, CA, 95531
707-464-9506
ewier@crescentcity.org

Submittal: BID SET

Sheet Title:
Irrigation Details

© GREENWORKS, P.C. 2024, ALL RIGHTS RESERVED

THESE DRAWINGS ARE THE PROPERTY OF GREENWORKS, P.C., AND ARE NOT TO BE USED OR REPRODUCED IN ANY MANNER, EXCEPT WITH THE PRIOR WRITTEN PERMISSION OF GREENWORKS, P.C.

Date:	05/09/2025
Revisions:	
Drawn By:	SS/MM/PG
Checked By:	BJ/GM
Job No.	220065
Approved:	BJ

L9.06

Sheet No. 53 of 63

G:\PROJECTS\220065 I_CRESCENT_CITY_BEACHFRONT_PARK\02_CLEAN_CA\02_PRODUCTION\01_CAD\01_PLOT_SHEETS\220065_DETL_CCA.DWG

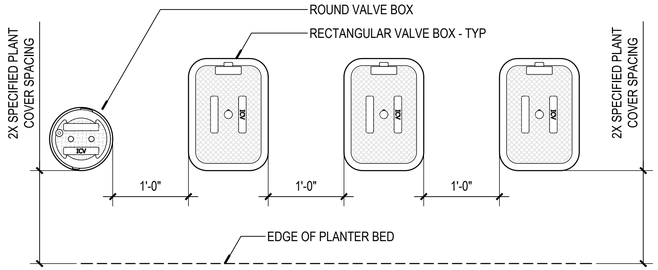

NOTES:
1. VALVE BOX LID COLOR SHALL BE PER IRRIGATION SPECIFICATIONS.
2. VALVE BOXES TO BE INSTALLED TO ALLOW FOR ORDERLY ARRANGEMENT.
3. LOCATION OF VALVE ASSEMBLIES SHALL BE STAKED FOR APPROVAL BY OWNER'S REPRESENTATIVE.
4. CENTER VALVE BOXES OVER VALVE ASSEMBLIES.
5. SET VALVE BOXES WITH TOPS AT EQUAL ELEVATIONS UNLESS STATED OTHERWISE.

1 VALVE BOX LAYOUT
PLAN

NOT TO SCALE

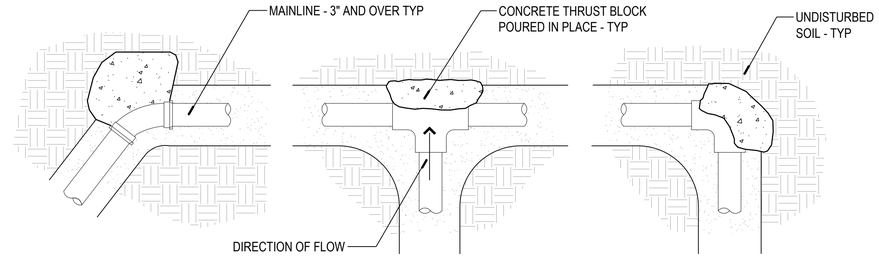

NOTES:
1. CONCRETE THRUST BLOCKING TO BE POURED AGAINST UNDISTURBED MATERIAL.
2. KEEP CONCRETE CLEAR OF JOINT AND ACCESSORIES.
3. THRUST BLOCK SHALL EXTEND INTO UNDISTURBED SOIL.
4. ACTIVE BEARING AREAS ARE BASED ON THE PRESSURE OF 150 PSI AND ON ALLOWABLE SOIL BEARING STRENGTH OF 2000 POUNDS PER SQUARE FOOT. TO COMPUTE BEARING AREA FOR DIFFERENT TEST PRESSURES AND SOIL BEARING STRESSES, USE THE FOLLOWING EQUATION.

BEARING AREA OF THRUST BLOCKS IN SQUARE FEET

FITTING SIZE	TEE	90° BEND	45° BEND
3"	1.0 SF	1.4 SF	1.0 SF
4"	1.0 SF	1.4 SF	1.0 SF
6"	2.1 SF	3.0 SF	1.6 SF

ADOPTED FROM APWA STD. NO. 62

BEARING AREA = (TEST PRESSURE/150) X (2000/SOIL BEARING STRESS) X (TABLE VALUE)

2 THRUST BLOCK INSTALLATION
PLAN

NOT TO SCALE

NOTE:
REPAIR TRENCH SETTLEMENT AND RESTORE FINISH GRADES PRIOR TO SEEDING, PLANTING AND MULCHING.

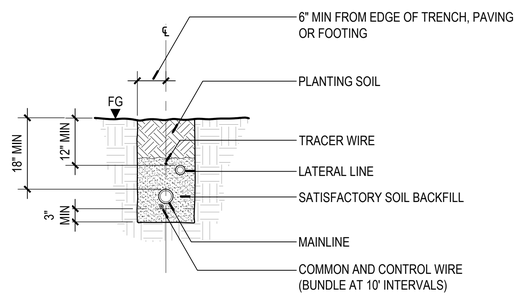

3 TRENCHING IN PLANTING AREAS
SECTION

NOT TO SCALE

NOTES:
1. ALL WIRES TO BE INSTALLED AS PER LOCAL CODE.
2. VERIFY CONTROLLER LOCATION WITH OWNER'S REPRESENTATIVE.

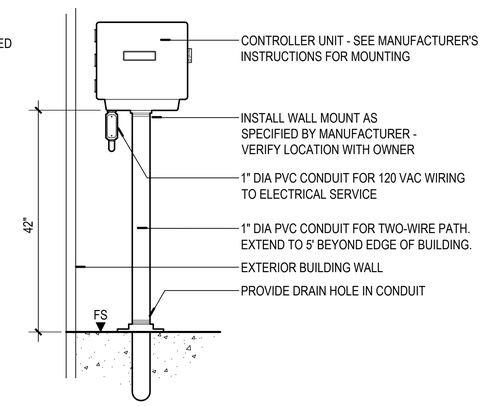

4 CONTROLLER - WALL MOUNT
ELEVATION

NOT TO SCALE

GREEN WORKS
LANDSCAPE ARCHITECTURE
ENVIRONMENTAL DESIGN
110 SE Main St., Suite 100
Portland, OR 97214
Ph: 503 222 5612
Fax: 503 222 2283
Email: info@greenworkspc.com

LICENSED LANDSCAPE ARCHITECT
BENJAMIN JOHNSON 6192
Signature
Renewal Date
Date
STATE OF CALIFORNIA

VERIFY SCALE: DRAWINGS ARE TO SCALE IF BAR MEASURES 1"
0" 1/2" 1"

CITY OF CRESCENT CITY CALIFORNIA 1854

Project:
Beachfront Park
Clean CA
City of Crescent City
377 J STREET
CRESCENT CITY, CA, 95531
707-464-9506
ewier@crescentcity.org

Submittal: BID SET

Sheet Title:
Irrigation Details

© GREENWORKS, P.C.
2024, ALL RIGHTS RESERVED

THESE DRAWINGS ARE THE PROPERTY OF GREENWORKS, P.C., AND ARE NOT TO BE USED OR REPRODUCED IN ANY MANNER, EXCEPT WITH THE PRIOR WRITTEN PERMISSION OF GREENWORKS, P.C.

Date:	05/09/2025
Revisions:	
Drawn By:	SS/MM/PG
Checked By:	BJ/GM
Job No.	220065
Approved:	BJ

L9.07

G:\PROJECTS\220065.1_CRESCENT_CITY_BEACHFRONT_PARK\02_CLEAN_CA\02_PRODUCTION\01_CAD\01_PLOT_SHEETS\220065_DETL_CCA.DWG

NOTES:
1. BARK MULCH LAYER IS AN ADDITION TO THE PLANTING SOIL AND IS NOT THE FINISH GRADE.
2. CONFIRM THE SUBGRADE IS AT THE PROPER ELEVATION PRIOR TO FINAL PLANTING SOIL INSTALLATION.
3. SUBGRADE TO SLOPE TO SUBSURFACE DRAINAGE LINES AND AWAY FROM STRUCTURES IF PRESENT.

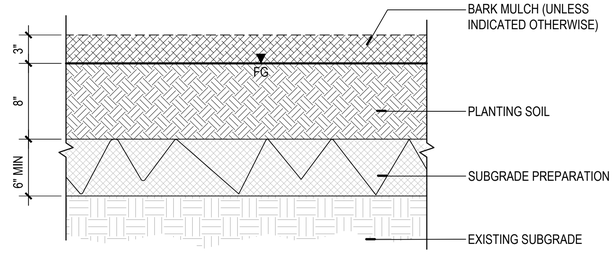

1 PLANTING SOIL
SECTION — NOT TO SCALE

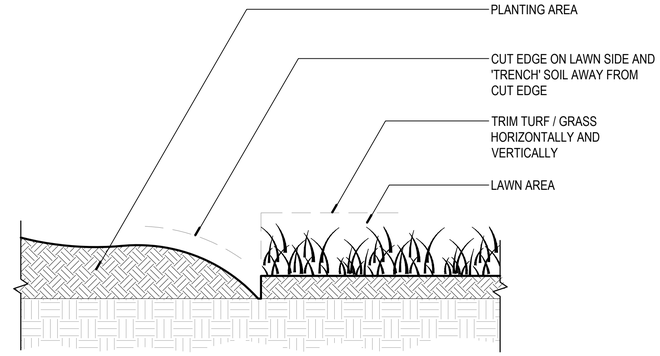

2 SHOVEL CUT EDGE
SECTION — NOT TO SCALE

NOTES:
1. ROOT CROWN TO BE VISIBLE BEFORE TREE IS SET. REMOVE TOP OF ROOT BALL MEDIA TO LOCATE IF NEEDED.
2. REMOVE TWINE, METAL BASKET, AND BURLAP ENTIRELY FROM ROOT BALL AFTER TREE IS SET. BURLAP SHALL BE CUT DOWN TO BASE OF ROOT BALL (DO NOT FOLD BURLAP). BURLAP ON BOTTOM MAY REMAIN IF NON-SYNTHETIC. ALL MATERIALS REMOVED FROM ROOT BALL PACKAGING SHALL BE REMOVED FROM PLANTING PIT.

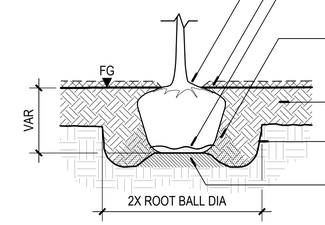

3 TREE PLANTING - B&B W/ PLANTING SOIL
SECTION — NOT TO SCALE

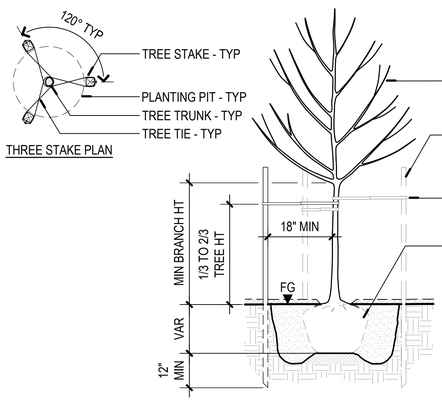

NOTE
TREE STAKES SHALL NOT INTERFERE WITH TREE BRANCHES.

4 TREE- STAKING
SECTION / PLAN — NOT TO SCALE

NOTES:
1. ROOT CROWN TO BE VISIBLE BEFORE TREE IS SET. REMOVE TOP OF ROOT BALL MEDIA TO LOCATE IF NEEDED.
2. REMOVE TWINE, METAL BASKET, AND BURLAP ENTIRELY FROM ROOT BALL AFTER TREE IS SET. BURLAP SHALL BE CUT DOWN TO BASE OF ROOT BALL (DO NOT FOLD BURLAP). BURLAP ON BOTTOM MAY REMAIN IF NON-SYNTHETIC. ALL MATERIALS REMOVED FROM ROOT BALL PACKAGING SHALL BE REMOVED FROM PLANTING PIT.

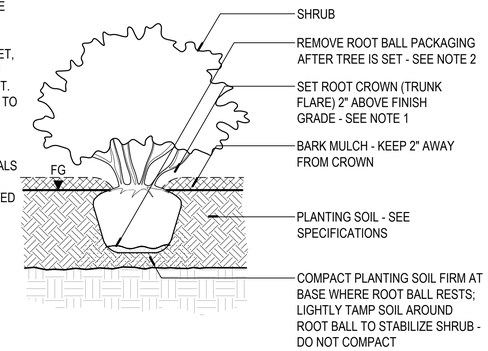

5 SHRUB B&B PLANTING W/ PLANTING SOIL
SECTION — NOT TO SCALE

NOTE:
PRIOR TO PLANTING, REMOVE PLANT FROM CONTAINER AND LOOSEN SIDES BY LIGHTLY TEASING OR SCRATCHING ROOT MASS.

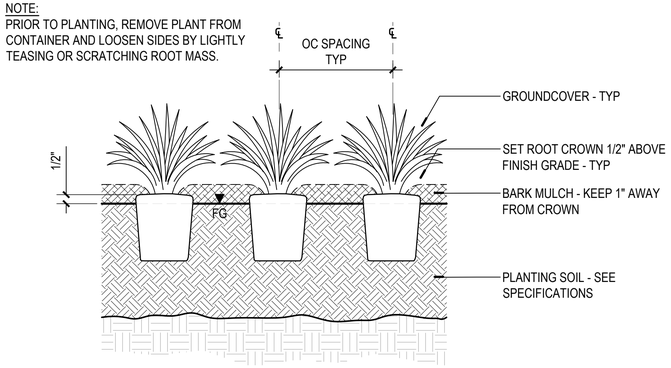

6 GROUNDCOVER PLANTING
SECTION — NOT TO SCALE

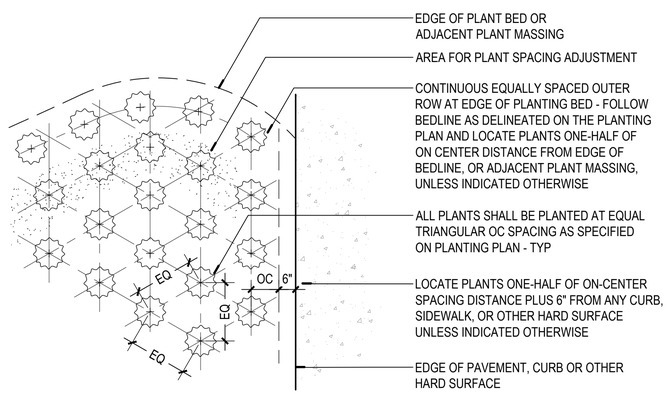

7 PLANT SPACING DIAGRAM
PLAN — NOT TO SCALE

NOTES:
1. INSTALL ROOT BARRIER PANEL PER MANUFACTURER'S INSTRUCTIONS.
2. INSTALL ROOT BARRIER FLUSH AGAINST PAVING EDGE AND SET 1/2" ABOVE FINISH GRADE. DO NOT WRAP PANELS AROUND ROOT BALL OR IMPEDE NORMAL ROOT GROWTH.
3. DO NOT DISTURB ADJACENT PAVING BASE OR SUBGRADE WITH PANEL INSTALLATION.

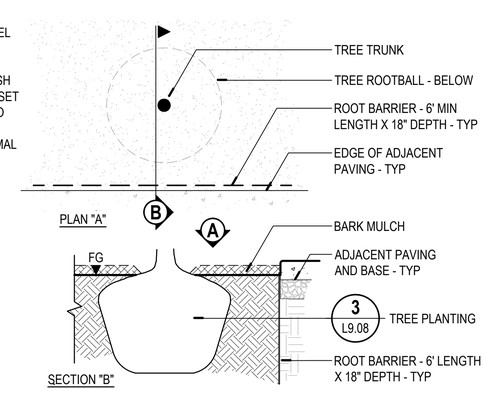

8 ROOT BARRIER
PLAN / SECTION — NOT TO SCALE

GREEN WORKS
LANDSCAPE ARCHITECTURE
ENVIRONMENTAL DESIGN
110 SE Main St., Suite 100
Portland, OR 97214
Ph: 503 222 5612
Fax: 503 222 2283
Email: info@greenworkspc.com

LICENSED LANDSCAPE ARCHITECT — BENJAMIN JOHNSON 6192 — Signature — Renewal Date — Date — STATE OF CALIFORNIA

VERIFY SCALE: DRAWINGS ARE TO SCALE IF BAR MEASURES 1"
0" 1/2" 1"

CITY OF CRESCENT CITY CALIFORNIA 1854

Project: Beachfront Park
Clean CA
City of Crescent City
377 J STREET
CRESCENT CITY, CA, 95531
707-464-9506
ewier@crescentcity.org

Submittal: BID SET
Sheet Title: Planting Details

© GREENWORKS, P.C. 2024, ALL RIGHTS RESERVED
THESE DRAWINGS ARE THE PROPERTY OF GREENWORKS, P.C., AND ARE NOT TO BE USED OR REPRODUCED IN ANY MANNER, EXCEPT WITH THE PRIOR WRITTEN PERMISSION OF GREENWORKS, P.C.

Date:	05/09/2025
Revisions:	
Drawn By:	SS/MM/PG
Checked By:	BJ/GM
Job No.	220065
Approved:	BJ

L9.08
Sheet No. 55 of 63

G:\PROJECTS\220065.1_CRESCENT_CITY_BEACHFRONT_PARK\02_CLEAN_CA\02_PRODUCTION\01_CAD\01_PLOT_SHEETS\220065_DETL_CCA.DWG

NOTE:
ART AND INTERPRETIVE ELEMENTS SHOWN (FX DETAIL SERIES) ARE SCHEMATIC AND NOT FOR CONSTRUCTION. FINAL SHOP DRAWINGS AND STRUCTURAL PLANS TO BE PROVIDED BY SELECTED FABRICATOR. ASSEMBLY, PLACEMENT OF STRUCTURES AND COORDINATION WITH INTERPRETIVE FABRICATOR IS IN CONTRACT. SIGN PANELS AND CONTENT IS N.I.C.

Sea Reach LTD

Project: Crescent City Beachfront Park
Job #: 2024.057

SEA REACH LTD.

REGISTERED PROFESSIONAL ENGINEER
GARY JAMES LEWIS
C 058073
Exp. 6-30-2026
CIVIL
STATE OF CALIFORNIA

SIGNED 2-18-2025

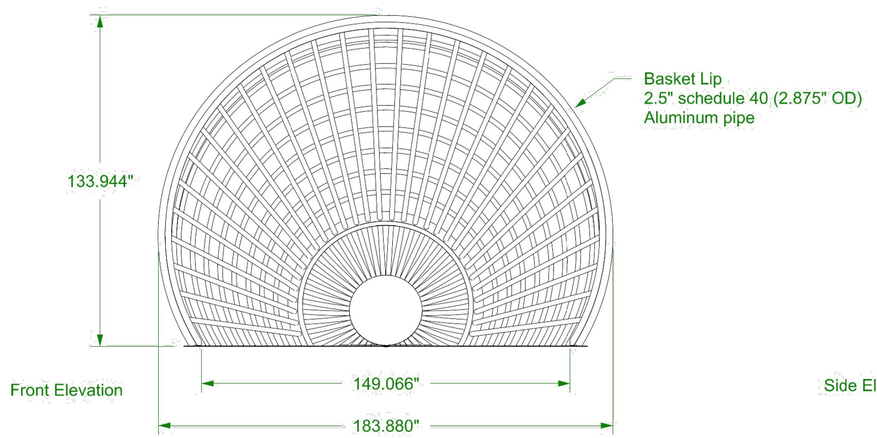

Front Elevation

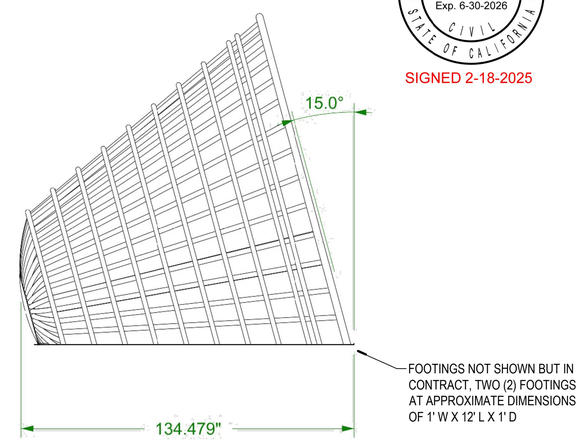

Side Elevation

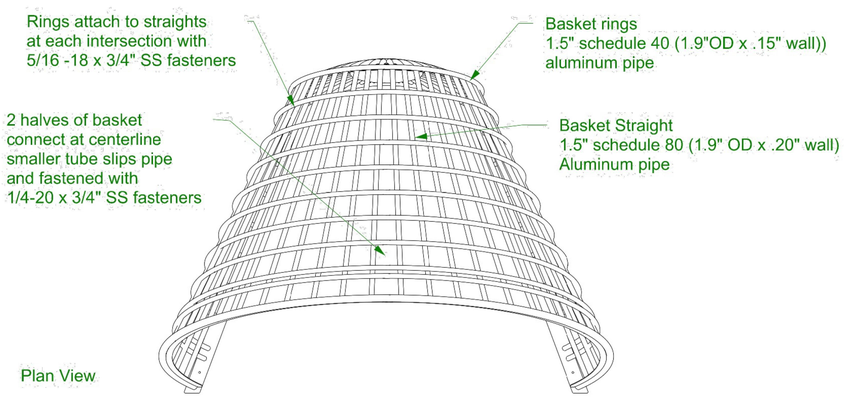

Plan View

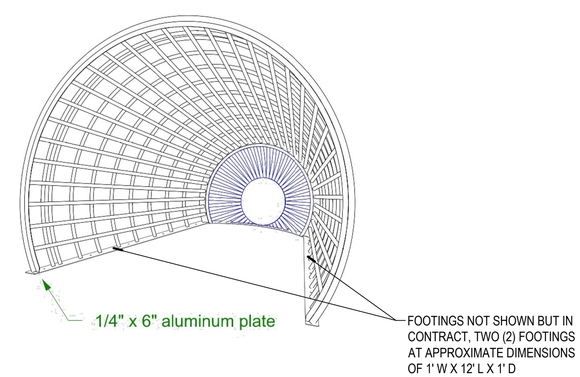

Perspective

Part: Burden Basket - Overall Dimensions
Material: Aluminum pipe and plate
Finish: Painted - by others
Quantity: 1

illume inc
8721 14th Avenue South
Seattle, WA 98108
206-566-5375

Drawn By: MAS	
Approved By: -	
Drawn	6/6/2024
Revised	1/27/2025

BB-1
SHEET 1 OF 1

/Users/mothership/Illume Dropbox/Matthew Shoudy/CURRENT JOBS/Sea Reach Ltd/2024.075 - Crescent City Beachfront Park/Drawings/BurdenBasketNode/Burden Basket.3dm

GREEN WORKS
LANDSCAPE ARCHITECTURE
ENVIRONMENTAL DESIGN
110 SE Main St., Suite 100
Portland, OR 97214
Ph: 503 222 5612
Fax: 503 222 2283
Email: info@greenworkspc.com

LICENSED LANDSCAPE ARCHITECT
BENJAMIN JOHNSON 6183
Signature
Renewal Date
Date
STATE OF CALIFORNIA

VERIFY SCALE: DRAWINGS ARE TO SCALE IF BAR MEASURES 1"
0" 1/2" 1"

CITY OF CRESCENT CITY CALIFORNIA 1854

Project:
Beachfront Park
Clean CA
City of Crescent City
377 J STREET
CRESCENT CITY, CA, 95531
707-464-9506
ewier@crescentcity.org

Submittal: BID SET

Sheet Title:
Burden Basket
Interpretive Node

© GREENWORKS, P.C.
2024, ALL RIGHTS RESERVED

THESE DRAWINGS ARE THE PROPERTY OF GREENWORKS, P.C., AND ARE NOT TO BE USED OR REPRODUCED IN ANY MANNER, EXCEPT WITH THE PRIOR WRITTEN PERMISSION OF GREENWORKS, P.C.

Date:	05/09/2025
Revisions:	
Drawn By:	SS/MM/PG
Checked By:	BJ/GM
Job No.	220065
Approved:	BJ

F1
Sheet No. 56 of 63

NOTE:
ART AND INTERPRETIVE ELEMENTS SHOWN (FX DETAIL SERIES) ARE SCHEMATIC AND NOT FOR CONSTRUCTION. FINAL SHOP DRAWINGS AND STRUCTURAL PLANS TO BE PROVIDED BY SELECTED FABRICATOR. ASSEMBLY, PLACEMENT OF STRUCTURES AND COORDINATION WITH INTERPRETIVE FABRICATOR IS IN CONTRACT. SIGN PANELS AND CONTENT IS N.I.C.

Sea Reach LTD

Project: Crescent City Beachfront Park
Job #: 2024.057

SEA REACH LTD.

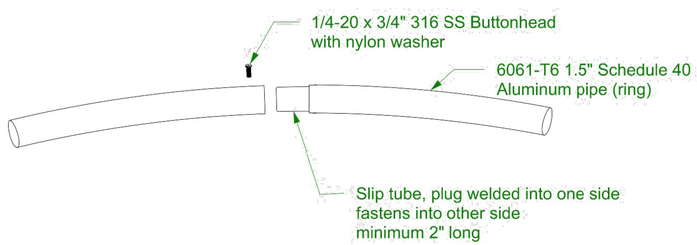

Pipe End Connection

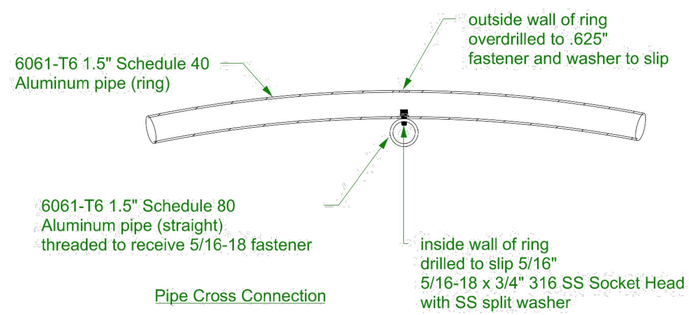

Pipe Cross Connection

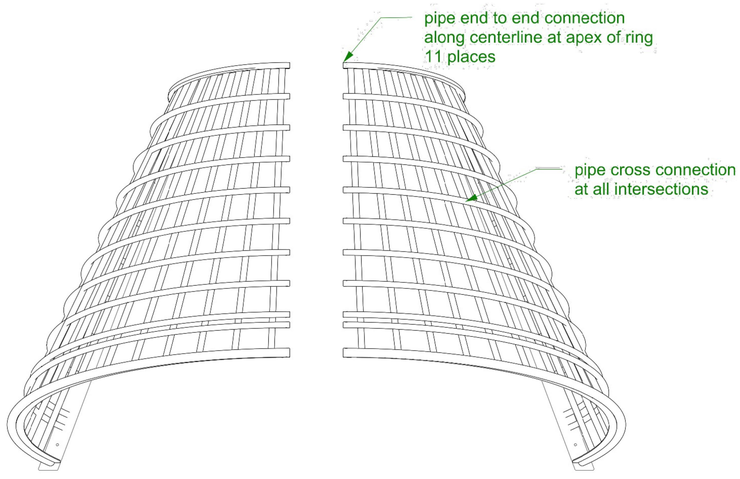

Plan View

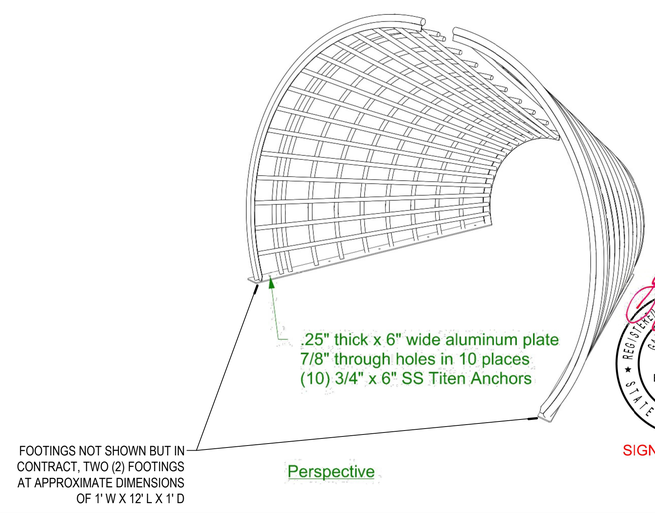

Perspective

REGISTERED PROFESSIONAL ENGINEER
GARY JAMES LEWIS
C 058073
Exp. 6-30-2026
CIVIL
STATE OF CALIFORNIA

SIGNED 2-18-2025

Part: Burden Basket - festener connections
Material: Aluminum pipe and plate
Finish: Painted - by others
Quantity: 1

illume inc
8721 14th Avenue South
Seattle, WA 98108
206-566-5375

Drawn By: MAS
Approved By: -

Drawn	6/6/2024
Revised	1/27/2025

BB-2
SHEET 1 OF 1

/Users/mothership/Illume Dropbox/Matthew Shoudy/CURRENT JOBS/Sea Reach Ltd/2024.075 - Crescent City Beachfront Park/Drawings/BurdenBasketNode/Burden Basket.3dm

GREEN WORKS
LANDSCAPE ARCHITECTURE
ENVIRONMENTAL DESIGN
110 SE Main St., Suite 100
Portland, OR 97214
Ph: 503 222 5612
Fax: 503 222 2283
Email: info@greenworkspc.com

LICENSED LANDSCAPE ARCHITECT
BENJAMIN JOHNSON 6183
Signature
Renewal Date
Date
STATE OF CALIFORNIA

VERIFY SCALE: DRAWINGS ARE TO SCALE IF BAR MEASURES 1"
0" 1/2" 1"

CITY OF CRESCENT CITY CALIFORNIA 1854

Project:
Beachfront Park
Clean CA
City of Crescent City
377 J STREET
CRESCENT CITY, CA, 95531
707-464-9506
ewier@crescentcity.org

Submittal: BID SET
Sheet Title:
Burden Basket
Interpretive Node

© GREENWORKS, P.C.
2024, ALL RIGHTS RESERVED
THESE DRAWINGS ARE THE PROPERTY OF GREENWORKS, P.C., AND ARE NOT TO BE USED OR REPRODUCED IN ANY MANNER, EXCEPT WITH THE PRIOR WRITTEN PERMISSION OF GREENWORKS, P.C.

Date:	05/09/2025
Revisions:	
Drawn By:	SS/MM/PG
Checked By:	BJ/GM
Job No.	220065
Approved:	BJ

F2
Sheet No. 57 of 63

NOTE:
ART AND INTERPRETIVE ELEMENTS SHOWN (FX DETAIL SERIES) ARE SCHEMATIC AND NOT FOR CONSTRUCTION. FINAL SHOP DRAWINGS AND STRUCTURAL PLANS TO BE PROVIDED BY SELECTED FABRICATOR. ASSEMBLY, PLACEMENT OF STRUCTURES AND COORDINATION WITH INTERPRETIVE FABRICATOR IS IN CONTRACT. SIGN PANELS AND CONTENT IS N.I.C.

Sea Reach LTD

Project: Crescent City Beachfront Park
Job #: 2024.057

SEA REACH LTD.

REGISTERED PROFESSIONAL ENGINEER
GARY JAMES LEWIS
C 058073
Exp. 6-30-2026
CIVIL
STATE OF CALIFORNIA

SIGNED 2-18-2025

Perspective

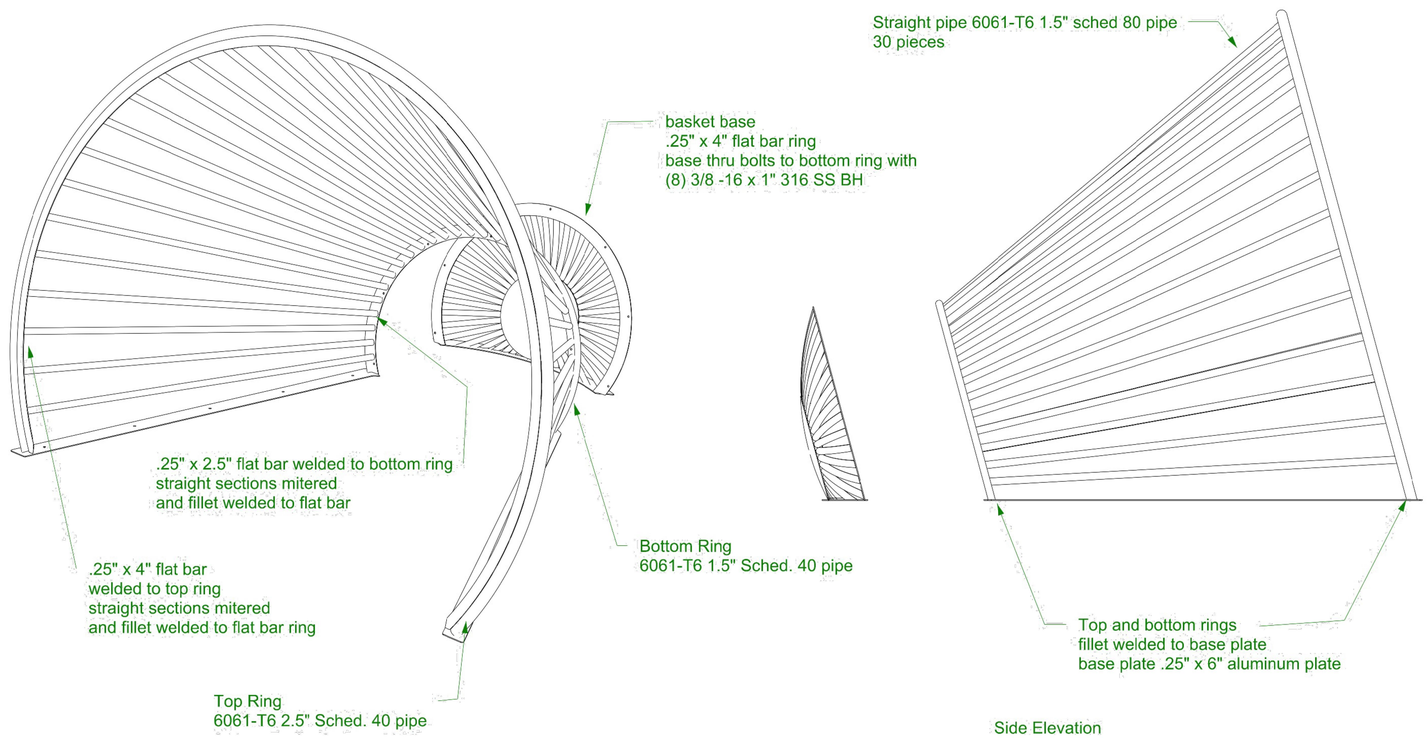

Side Elevation

Part: Burden Basket - Straights Material: Aluminum pipe and plate Finish: Painted - by others Quantity: 1	illume inc 8721 14th Avenue South Seattle, WA 98108 206-566-5375	Drawn By: MAS Approved By: - Drawn 6/6/2024 Revised 1/27/2025	BB-3 SHEET 1 OF 1

/Users/mothership/Illume Dropbox/Matthew Shoudy/CURRENT JOBS/Sea Reach Ltd/2024.075 - Crescent City Beachfront Park/Drawings/BurdenBasketNode/Burden Basket.3dm

GREEN WORKS
LANDSCAPE ARCHITECTURE
ENVIRONMENTAL DESIGN
110 SE Main St., Suite 100
Portland, OR 97214
Ph: 503 222 5612
Fax: 503 222 2283
Email: info@greenworkspc.com

LICENSED LANDSCAPE ARCHITECT
BENJAMIN JOHNSON 6183
Signature
Renewal Date
Date
STATE OF CALIFORNIA

VERIFY SCALE: DRAWINGS ARE TO SCALE IF BAR MEASURES 1"
0" 1/2" 1"

CITY OF CRESCENT CITY CALIFORNIA 1854

Project:
Beachfront Park
Clean CA
City of Crescent City
377 J STREET
CRESCENT CITY, CA, 95531
707-464-9506
ewier@crescentcity.org

Submittal: BID SET

Sheet Title:
Burden Basket Interpretive Node

© GREENWORKS, P.C.
2024, ALL RIGHTS RESERVED
THESE DRAWINGS ARE THE PROPERTY OF GREENWORKS, P.C., AND ARE NOT TO BE USED OR REPRODUCED IN ANY MANNER, EXCEPT WITH THE PRIOR WRITTEN PERMISSION OF GREENWORKS, P.C.

Date:	05/09/2025
Revisions:	
Drawn By:	SS/MM/PG
Checked By:	BJ/GM
Job No.	220065
Approved:	BJ

F3

Sheet No. 58 of 63

NOTE:
ART AND INTERPRETIVE ELEMENTS SHOWN (FX DETAIL SERIES) ARE SCHEMATIC AND NOT FOR CONSTRUCTION. FINAL SHOP DRAWINGS AND STRUCTURAL PLANS TO BE PROVIDED BY SELECTED FABRICATOR. ASSEMBLY, PLACEMENT OF STRUCTURES AND COORDINATION WITH INTERPRETIVE FABRICATOR IS IN CONTRACT. SIGN PANELS AND CONTENT IS N.I.C.

Redwood Node

Project: Sea Reach - Crescent City
Job #: 2024-075

SEA REACH LTD.

REGISTERED PROFESSIONAL ENGINEER
GARY JAMES LEWIS
C 058073
Exp. 6-30-2026
CIVIL
STATE OF CALIFORNIA

SIGNED 2-18-2025

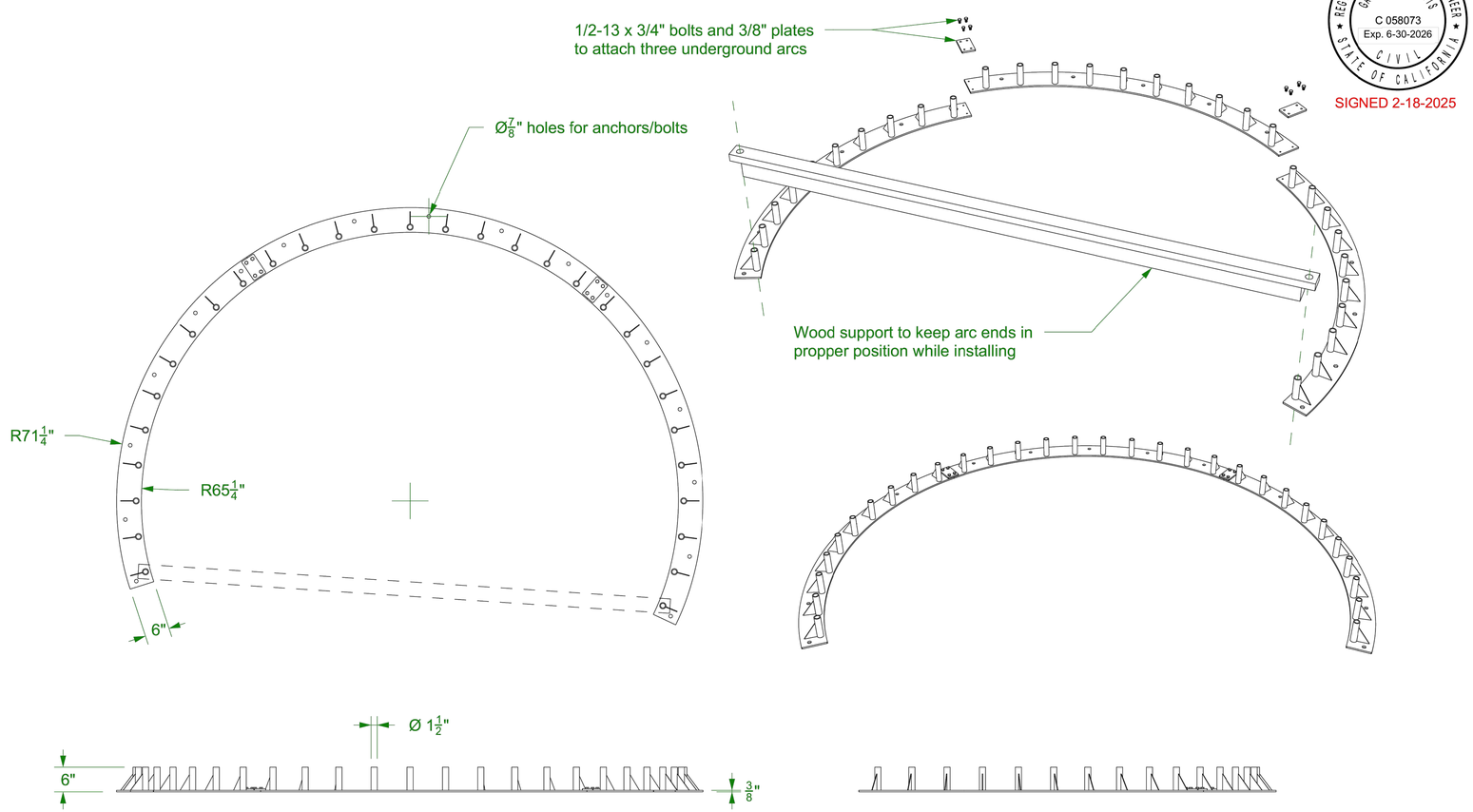

Part: Base to go into the concrete
Material: .375" steel plate and 1.5" OD x .188" wall x 1.12" ID steel tube
Finish: NA
Quantity: 1

illume inc
8721 14th Avenue South
Seattle, WA 98108
206-566-5375

Drawn By: AGE	
Approved By: -	
Drawn	1/14/2025
Revised	2/12/2025

RN 1.1
SHEET 1 OF 2

D:\Illume Dropbox\Andrew Elliott\CURRENT JOBS\Sea Reach Ltd\2024.075 - Crescent City Beachfront Park\Drawings\RedwoodNode\Redwood Model with Wood Rings.3dm

GREEN WORKS
LANDSCAPE ARCHITECTURE
ENVIRONMENTAL DESIGN
110 SE Main St., Suite 100
Portland, OR 97214
Ph: 503 222 5612
Fax: 503 222 2283
Email: info@greenworkspc.com

LICENSED LANDSCAPE ARCHITECT
BENJAMIN JOHNSON 6192
Signature
Renewal Date
Date
STATE OF CALIFORNIA

VERIFY SCALE: DRAWINGS ARE TO SCALE IF BAR MEASURES 1"
0" 1/2" 1"

CITY OF CRESCENT CITY CALIFORNIA 1854

Project:
Beachfront Park
Clean CA
City of Crescent City
377 J STREET
CRESCENT CITY, CA, 95531
707-464-9506
ewier@crescentcity.org

Submittal: BID SET
Sheet Title:
Redwood Tree Interpretive Node

© GREENWORKS, P.C. 2024, ALL RIGHTS RESERVED
THESE DRAWINGS ARE THE PROPERTY OF GREENWORKS, P.C., AND ARE NOT TO BE USED OR REPRODUCED IN ANY MANNER, EXCEPT WITH THE PRIOR WRITTEN PERMISSION OF GREENWORKS, P.C.

Date:	05/09/2025
Revisions:	
Drawn By:	SS/MM/PG
Checked By:	BJ/GM
Job No.	220065
Approved:	BJ

F4
Sheet No. 59 of 63

G:\PROJECTS\220065.1_CRESCENT_CITY_BEACHFRONT_PARK\02_CLEAN_CA\02_PRODUCTION\01_CAD\01_PLOT_SHEETS\220065_DETL_CCA.DWG

NOTE:
ART AND INTERPRETIVE ELEMENTS SHOWN (FX DETAIL SERIES) ARE SCHEMATIC AND NOT FOR CONSTRUCTION. FINAL SHOP DRAWINGS AND STRUCTURAL PLANS TO BE PROVIDED BY SELECTED FABRICATOR. ASSEMBLY, PLACEMENT OF STRUCTURES AND COORDINATION WITH INTERPRETIVE FABRICATOR IS IN CONTRACT. SIGN PANELS AND CONTENT IS N.I.C.

Redwood Node

Project: Sea Reach - Crescent City
Job #: 2024-075

SEA REACH LTD.

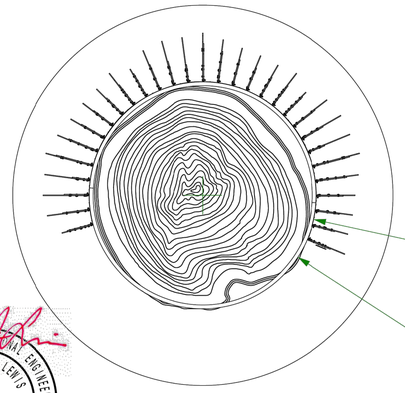

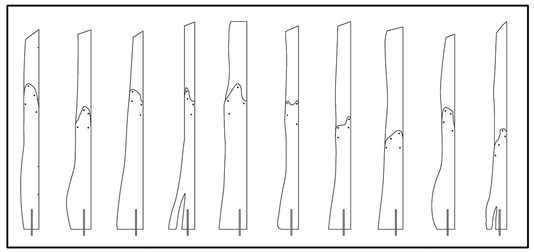

10 different fins repeated x3 (30 total)
Fins are (2) 3/8" steel plates atteched with (4) 1/2"-13 screws
Assembled sizes to not exceed 24" x 192"

R60" (inside face of fins)

(x2) Ø119$\frac{3}{4}$" alumunim hoop in two pieces
6" x 2" x 0.125" wall 6063-T52
Hoops attach to steel hops behind them
with stainless 3/8"-16 screws

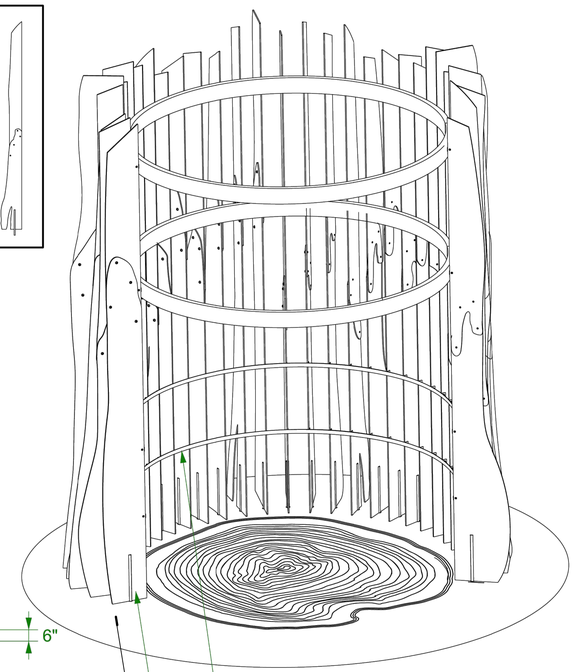

(x4) 1.5" x 0.25" steel flat bar hoop with
welded tabs
Hoops attach to fins with stainless
3/8"-16 screws and nuts

(x30) Ø 1" A588 steel rods slip fit into
tubes cast into the concrete below
(see page RN 1.2)

AGGREGATE BASE AND STRUCTURAL RAT SLAB IN CONTRACT, APPROXIMATE DIAMETER OF 171.5" AND DEPTH OF 8", STRUCTURAL TO VERIFY. FINISHING SLAB IN CONTRACT, TO BE COORDINATED WITH FABRICATOR FOR PLACEMENT OF TREE RING ART INLAY.

REGISTERED PROFESSIONAL ENGINEER
GARY JAMES LEWIS
C 058073
Exp. 6-30-2026
CIVIL
STATE OF CALIFORNIA

SIGNED 2-18-2025

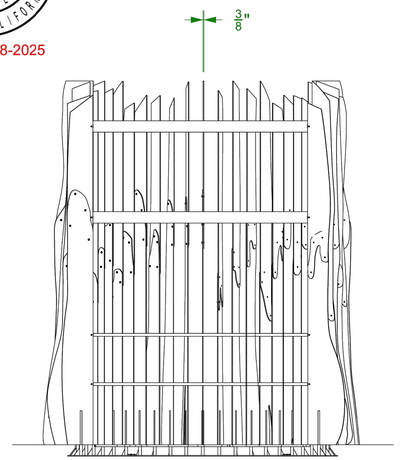

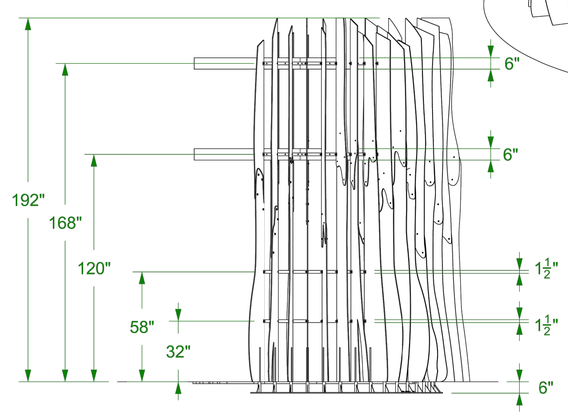

Part: Assembled redwood sculpture
Material: misc. steel
Finish: natural rust
Quantity: 1

illume inc
8721 14th Avenue South
Seattle, WA 98108
206-566-5375

Drawn By: AGE	
Approved By: -	
Drawn	1/14/2025
Revised	2/12/2025

RN 1.2
SHEET 2 OF 2

D:\Illume Dropbox\Andrew Elliott\CURRENT JOBS\Sea Reach Ltd\2024.075 - Crescent City Beachfront Park\Drawings\RedwoodNode\Redwood Model with Wood Rings.3dm

GREEN WORKS
LANDSCAPE ARCHITECTURE
ENVIRONMENTAL DESIGN
110 SE Main St., Suite 100
Portland, OR 97214
Ph: 503 222 5612
Fax: 503 222 2283
Email: info@greenworkspc.com

LICENSED LANDSCAPE ARCHITECT
BENJAMIN JOHNSON #593
Signature
Renewal Date
Date
STATE OF CALIFORNIA

VERIFY SCALE: DRAWINGS ARE TO SCALE IF BAR MEASURES 1"
0" 1/2" 1"

CITY OF CRESCENT CITY CALIFORNIA 1854

Project:
Beachfront Park
Clean CA
City of Crescent City
377 J STREET
CRESCENT CITY, CA, 95531
707-464-9506
ewier@crescentcity.org

Submittal: BID SET
Sheet Title:
Redwood Tree Interpretive Node

© GREENWORKS, P.C. 2024, ALL RIGHTS RESERVED
THESE DRAWINGS ARE THE PROPERTY OF GREENWORKS, P.C., AND ARE NOT TO BE USED OR REPRODUCED IN ANY MANNER, EXCEPT WITH THE PRIOR WRITTEN PERMISSION OF GREENWORKS, P.C.

Date:	05/09/2025
Revisions:	
Drawn By:	SS/MM/PG
Checked By:	BJ/GM
Job No.	220065
Approved:	BJ

F5
Sheet No. 60 of 63

G:\PROJECTS\220065_CRESCENT_CITY_BEACHFRONT_PARK\02_CLEAN_CA\02_PRODUCTION\01_CAD\01_PLOT_SHEETS\220065_DETL_CCA.DWG

NOTE:
ART AND INTERPRETIVE ELEMENTS SHOWN (FX DETAIL SERIES) ARE SCHEMATIC AND NOT FOR CONSTRUCTION. FINAL SHOP DRAWINGS AND STRUCTURAL PLANS TO BE PROVIDED BY SELECTED FABRICATOR. ASSEMBLY, PLACEMENT OF STRUCTURES AND COORDINATION WITH INTERPRETIVE FABRICATOR IS IN CONTRACT. SIGN PANELS AND CONTENT IS N.I.C.

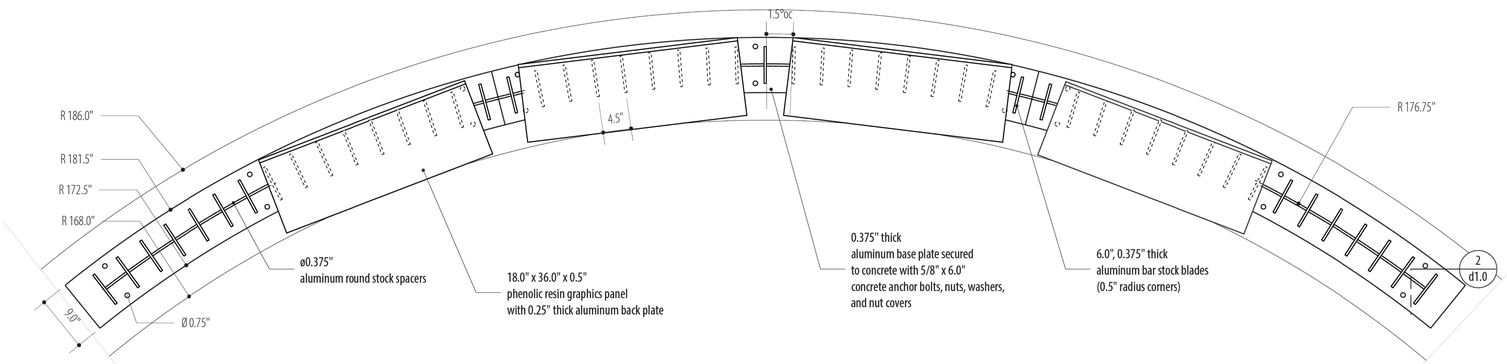

1 **tolowa walk entry exhibits - plan view**
NOT TO SCALE

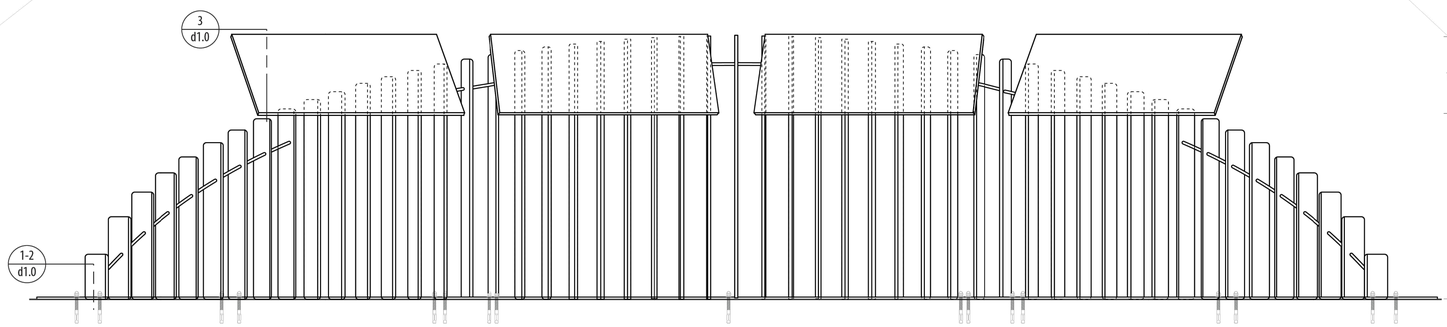

2 **tolowa walk entry exhibits - front view**
NOT TO SCALE

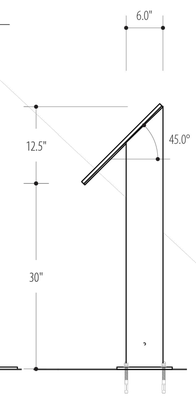

3 **side view**
NOT TO SCALE

SEA REACH LTD.
146 ne yamhill street
sheridan
oregon 97378
telephone 503.843.2005
facsimile 503.843.2744
email info@seareach.com

client	**green works**	**contact**	ben johnson	**drawing**	tolowa walk entry node exhibits	**notes**	**by** pr/mab
	24 nw 2nd ave, suite 100	**title**	principal / landscape architect	**scale**	NOT TO SCALE		**date** 2025.05.07 **version** 2
	portland, or 97209	**email**	benj@greenworkspc.com	**code**	**CRC-0005**		**page** 1.0
		phone	503.222.5612	**project**	tolowa nodes		

GREEN WORKS
LANDSCAPE ARCHITECTURE
ENVIRONMENTAL DESIGN
110 SE Main St., Suite 100
Portland, OR 97214
Ph: 503 222 5612
Fax: 503 222 2283
Email: info@greenworkspc.com

LICENSED LANDSCAPE ARCHITECT
BENJAMIN JOHNSON #482
Signature
Renewal Date
Date
STATE OF CALIFORNIA

VERIFY SCALE: DRAWINGS ARE TO SCALE IF BAR MEASURES 1"
0" 1/2" 1"

CITY OF CRESCENT CITY CALIFORNIA 1854

Project: Beachfront Park Clean CA
City of Crescent City
577 J STREET
CRESCENT CITY, CA, 95531
707-464-9506
ewier@crescentcity.org

Submittal: BID SET

Sheet Title: Tolowa Walk Entry Exhibits

© GREENWORKS, P.C.
2024, ALL RIGHTS RESERVED
THESE DRAWINGS ARE THE PROPERTY OF GREENWORKS, P.C., AND ARE NOT TO BE USED OR REPRODUCED IN ANY MANNER, EXCEPT WITH THE PRIOR WRITTEN PERMISSION OF GREENWORKS, P.C.

Date: 05/09/2025
Revisions:

Drawn By: SS/MM/PG
Checked By: BJ/GM
Job No. 220065
Approved: BJ

F6

G:\PROJECTS\220065.1_CRESCENT_CITY_BEACHFRONT_PARK\02_CLEAN_CA\02_PRODUCTION\01_CAD\01_PLOT_SHEETS\220065_DETL_CCA.DWG

NOTE:
ART AND INTERPRETIVE ELEMENTS SHOWN (FX DETAIL SERIES) ARE SCHEMATIC AND NOT FOR CONSTRUCTION. FINAL SHOP DRAWINGS AND STRUCTURAL PLANS TO BE PROVIDED BY SELECTED FABRICATOR. ASSEMBLY, PLACEMENT OF STRUCTURES AND COORDINATION WITH INTERPRETIVE FABRICATOR IS IN CONTRACT. SIGN PANELS AND CONTENT IS N.I.C.

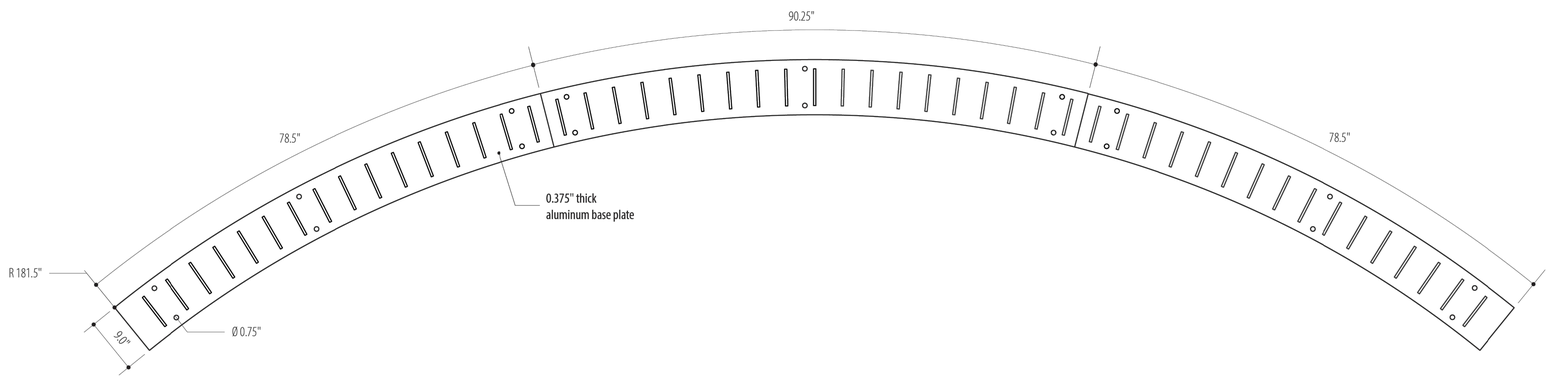

1 **detail base plate - plan view**
NOT TO SCALE

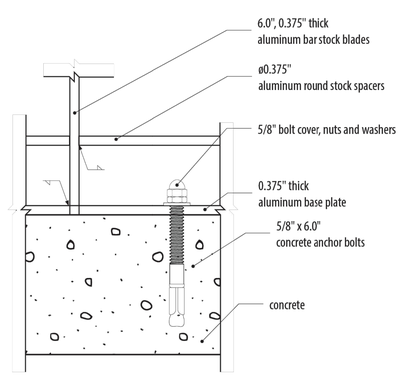

2 **detail base plate - front view**
NOT TO SCALE

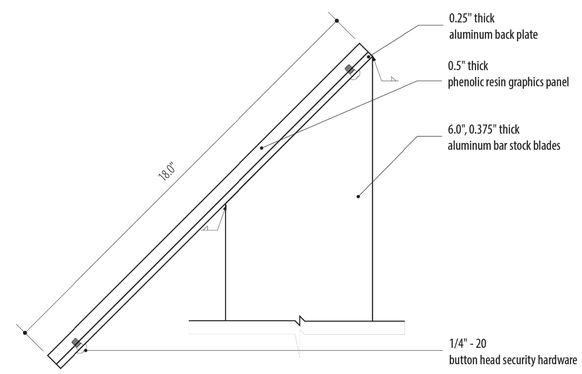

3 **detail panel attachment - side view**
NOT TO SCALE

S E A R E A C H L T D .
146 ne yamhill street
sheridan
oregon 97378
telephone 503.843.2005
facsimile 503.843.2744
email info@seareach.com

client	green works	**contact**	ben johnson	**drawing**	detail base plate and panel attachment	**notes**	
	24 nw 2nd ave, suite 100	**title**	principal / landscape architect	**scale**	NOT TO SCALE		
	portland, or 97209	**email**	benj@greenworkspc.com	**code**	**CRC-0005**		
		phone	503.222-5612	**project**	tolowa nodes		

by mab
date 2025.05.07 **version** 2
page d1.0

GREEN WORKS
LANDSCAPE ARCHITECTURE
ENVIRONMENTAL DESIGN
110 SE Main St., Suite 100
Portland, OR 97214
Ph: 503 222 5612
Fax: 503 222 2283
Email: info@greenworkspc.com

LICENSED LANDSCAPE ARCHITECT
BENJAMIN JOHNSON #592
Signature
Renewal Date
Date
STATE OF CALIFORNIA

VERIFY SCALE: DRAWINGS ARE TO SCALE IF BAR MEASURES 1"
0" 1/2" 1"

CITY OF CRESCENT CITY CALIFORNIA 1854

Project:
Beachfront Park
Clean CA
City of Crescent City
377 J STREET
CRESCENT CITY, CA, 95531
707-464-9506
ewier@crescentcity.org

Submittal: BID SET
Sheet Title:
Tolowa Walk Entry Exhibits

© GREENWORKS, P.C.
2024, ALL RIGHTS RESERVED
THESE DRAWINGS ARE THE PROPERTY OF GREENWORKS, P.C., AND ARE NOT TO BE USED OR REPRODUCED IN ANY MANNER, EXCEPT WITH THE PRIOR WRITTEN PERMISSION OF GREENWORKS, P.C.

Date:	05/09/2025
Revisions:	
Drawn By:	SS/MM/PG
Checked By:	BJ/GM
Job No.	220065
Approved:	BJ

F7
Sheet No. 62 of 63

G:\PROJECTS\220065.1_CRESCENT_CITY_BEACHFRONT_PARK\02_CLEAN_CA\02_PRODUCTION\01_CAD\01_PLOT_SHEETS\220065_DETL_CCA.DWG

NOTE:
ART AND INTERPRETIVE ELEMENTS SHOWN (FX DETAIL SERIES) ARE SCHEMATIC AND NOT FOR CONSTRUCTION. FINAL SHOP DRAWINGS AND STRUCTURAL PLANS TO BE PROVIDED BY SELECTED FABRICATOR. ASSEMBLY, PLACEMENT OF STRUCTURES AND COORDINATION WITH INTERPRETIVE FABRICATOR IS IN CONTRACT. SIGN PANELS AND CONTENT IS N.I.C.

1 **custom double sided upright - plan view**
NOT TO SCALE

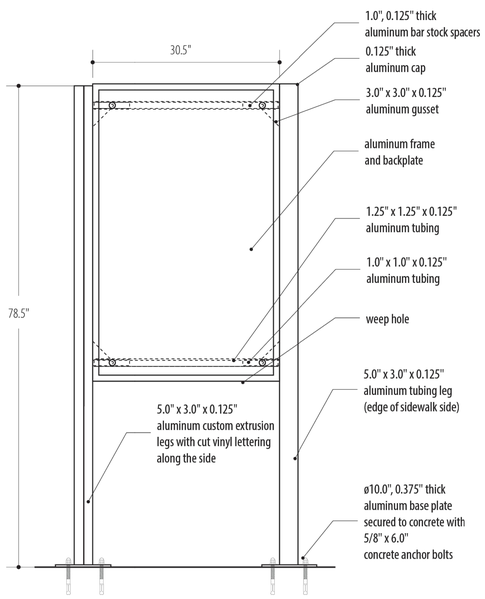

2 **custom double sided upright - front view**
NOT TO SCALE

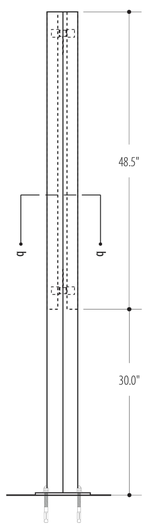

3 **custom double sided upright - side view**
NOT TO SCALE

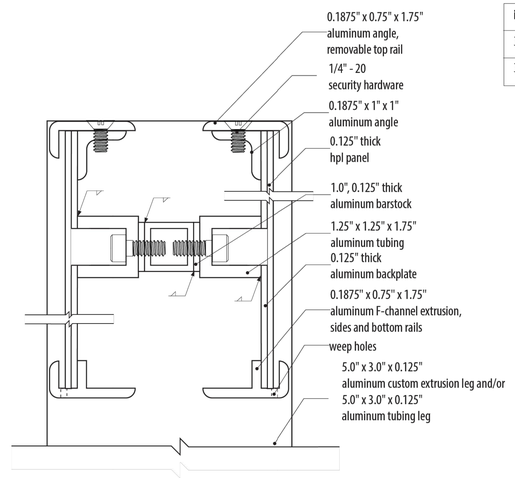

4 **detail frame cross section b-b**
NOT TO SCALE

item description	qty
30.0" x 48.0" custom double sided aluminum upright	6
30.0" x 48.0" x 0.125" hpl panel	12

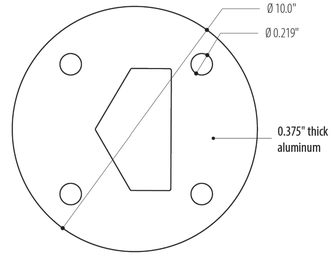

5 **detail - flange**
NOT TO SCALE

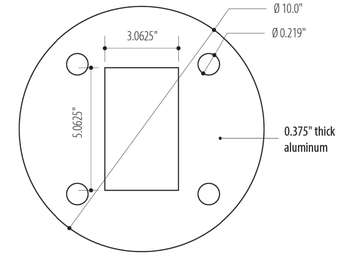

5 **detail - flange**
NOT TO SCALE

SEA REACH LTD.
146 ne yamhill street telephone 503.843.2005
sheridan facsimile 503.843.2744
oregon 97378 email info@seareach.com

client	green works	**contact**	ben johnson	**drawing**	TRIP PLANNING SIGNS	**notes**	
	24 nw 2nd ave, suite 100	**title**	principal / landscape architect	**scale**	NOT TO SCALE		
	portland, or 97209	**email**	benj@greenworkspc.com	**code**	CRC-0005		
		phone	503.222-5612	**project**	tolowa nodes		

by	mab		
date	2025.05.07	**version**	2
page	2.0		

GREEN WORKS
LANDSCAPE ARCHITECTURE
ENVIRONMENTAL DESIGN
110 SE Main St., Suite 100
Portland, OR 97214
Ph: 503 222 5612
Fax: 503 222 2283
Email: info@greenworkspc.com

LICENSED LANDSCAPE ARCHITECT
BENJAMIN JOHNSON 6162
Signature
Renewal Date
Date
STATE OF CALIFORNIA

VERIFY SCALE: DRAWINGS ARE TO SCALE IF BAR MEASURES 1"
0" 1/2" 1"

CITY OF CRESCENT CITY CALIFORNIA 1854

Project:
Beachfront Park
Clean CA
City of Crescent City
377 J STREET
CRESCENT CITY, CA, 95531
707-464-9506
ewier@crescentcity.org

Submittal: BID SET

Sheet Title:
Travel Planning Signs

© GREENWORKS, P.C.
2024, ALL RIGHTS RESERVED
THESE DRAWINGS ARE THE PROPERTY OF GREENWORKS, P.C., AND ARE NOT TO BE USED OR REPRODUCED IN ANY MANNER, EXCEPT WITH THE PRIOR WRITTEN PERMISSION OF GREENWORKS, P.C.

Date:	05/09/2025
Revisions:	
Drawn By:	SS/MM/PG
Checked By:	BJ/GM
Job No.	220065
Approved:	BJ

F8
Sheet No. 63 of 63

G:\PROJECTS\220065.1_CRESCENT_CITY_BEACHFRONT_PARK\02_CLEAN_CA\02_PRODUCTION\01_CAD\01_PLOT_SHEETS\220065_DETL_CCA.DWG