Site Development Plans For

ELM GROVE DODGE CHRYSLER JEEP RAM

INVENTORY DISPLAY AREA EXPANSION

2538 National Road, Wheeling, Ohio County, West Virginia

GENERAL NOTES

1. The Contractor and Subcontractor shall be solely responsible for complying with all Federal, State and local safety requirements, together with exercising precautions at all times for the protection of persons (including employees) and property. It is also the sole responsibility of the Contractor and Subcontractor to initiate, maintain and supervise all safety requirements, precautions and programs in connection with this work.

2. Existing utilities shown are from best available records and field investigation, and are not necessarily complete or exact. The Contractor is responsible for the investigation, location, support, protection and restoration of all existing utilities and appurtenances whether shown on these plans or not. The Contractor shall expose all utilities or construction prior to construction to verify the vertical and horizontal effect on the proposed construction, and shall make adjustments in elevations to provide sufficient clearance between the proposed and existing utilities. The Contractor shall call the utilities protection service (Dial 811) at least three (3) working days prior to work in the vicinity of their underground utilities.

3. Chadan Engineering, Inc. assumes no responsibility for the accuracy and/or completeness of the provided surveying and mapping information nor any errors or omissions resulting from missing or inaccurate data.

4. The Contractor shall exercise extreme caution when working near existing utilities. It is the Contractor's responsibility to contact the appropriate utility agency prior to exposing the agency's utility. The Contractor is responsible for repairing any utility that may become damaged during the course of construction.

5. Should the Contractor discover any discrepancies of conflicts with the existing and/or proposed information, the project Architect and Engineer shall be notified prior to continuing work.

6. All proposed utility locations shall be provided by a state licensed surveyor, prior to installation. The Contractor shall adjust all structures to final grade as needed.

7. The Contractor and/or Owner is responsible for coordinating with the electric, gas and communication companies regarding providing service to the development. Any information shown on plans shall be considered schematic for budgetary purposes only.

8. Any property corner pins or permanent survey markings disturbed during construction shall be reset by a registered surveyor at the Contractor's expense.

9. The tracking or spillage of mud, dirt or debris upon public roads or the existing parking lots is prohibited and any such occurrence shall be cleaned up immediately by the Contractor. If the Contractor fails to keep the work area clean of debris, or fails to clean mud or dirt, the local jurisdiction may take action and assess the Contractor for the costs that are incurred.

10. No non-rubber tire vehicles shall be moved on public roads; exceptions may be granted where short distances and special circumstances are involved. Granting of exceptions shall be in writing.

11. The Contractor shall exercise extreme caution when excavating in the vicinity of existing trees, taking all measures possible to protect and preserve them. The Contractor shall be governed by the provisions of his contract with the Owner.

12. All field tile broken during excavation shall be replaced to its original condition or connected to the storm sewer system. The Contractor shall maintain a set of as-built documents for any tile encountered during construction.

13. Proposed stormwater management and conveyance systems will be owned by the Owner. It will be the Owner's responsibility to properly maintain and inspect the stormwater management system.

14. All traffic control devices shall be furnished, erected, maintained and removed by the Contractor in accordance with the latest edition of the West Virginia Department of Transportation Manual for Temporary Traffic Controls.

15. All trenches shall be backfilled or securely plated during nonworking hours.

16. Access to all adjoining properties shall be maintained at all times.

17. All areas within the public right-of-way that are disturbed by this project shall be restored to original or better condition.

18. At all utility crossings where the existing utility is exposed in the trench, the backfill shall consist of compacted granular material between the deeper and shallower pipe. Where proposed utilities or services cross proposed or existing pavement areas, backfill shall be compacted granular extending at least 3 feet beyond the back of curb or edge of pavement. Cost is to be included in the price bid for related pipe.

19. Clean water connections to sanitary sewer lines are strictly prohibited, this include roof drains, foundation drains, yard drains, catch basins and trench drains.

20. Curb inlets, manholes and catch basins shall be channeled as directed. Tops inlets and catch basins shall be adjusted with the final slope of the road surface.

21. Where it is necessary to disturb pavements or drives, the pavement shall be saw cut in neat straight lines. The depth of the saw shall be at least 4 inches. Existing asphalt or concrete shall be replaced to a thickness equal or greater than original. Aggregate base shall be replaced if needed.

22. Erosion control measures in accordance with the requirements of the State of West Virginia. The Contractor shall provide sediment control at all points where water leaves the project, including waterways, overland sheet flow and storm sewers. The Contractor shall provide adequate drainage of the work area at all times consistent with erosion control practices. Disturbed areas that remain unworked for 14 days shall be seeded. Other sediment controls that are installed shall be maintained until vegetation growth has been established. The Contractor shall be responsible for the removal of all temporary sediment devices at the conclusion but not before the growth of permanent ground cover.

23. Submittals shall be provided to the Engineer electronically for review and comment. The Engineer typically responds within 10 business days. If the submittal is critical, the Contractor shall notify the engineer directly about the urgency.

24. The Contractor shall maintain a set of as-builts on site. Once the project is complete, the as-built set shall be delivered to the Owner.

25. The Contractor is responsible for confirming all quantities for the site development. Any quantities provided by Chadan Engineering are to be considered estimates and not to be used for contract bid work.

26. The Contractor is responsible for submitting all substitutions for review and approval prior to final bidding. Chadan Engineering reserves the right to deny any substitutions for any reason. The Contractor shall be responsible for any price differences when bidding unapproved substitutions. The Contractor will also be responsible for Chadan Engineering's fees for reviewing substitute materials and/or products.

27. Plans labeled "For Review" or "For Permitting Only" are not to be considered for final bidding purposes. Only plans labeled "For Construction" shall be considered for final bidding. The Contractor will be responsible for any change orders due to bidding any plans not labeled "For Construction".

28. Chadan Engineering will release the final CAD file once all permits are in place. The file will be released to the General Contractor only upon receipt of an executed CAD Waiver. The GC can distribute the file, if needed. Should sub-contractors require the file, an agreement must be completed with the GC. Chadan will not release any additional CAD files as it pertains to this development include TIN or Surface files.

LOCATION MAP

Scale: 1" = 2000'

0 2000 4000 6000

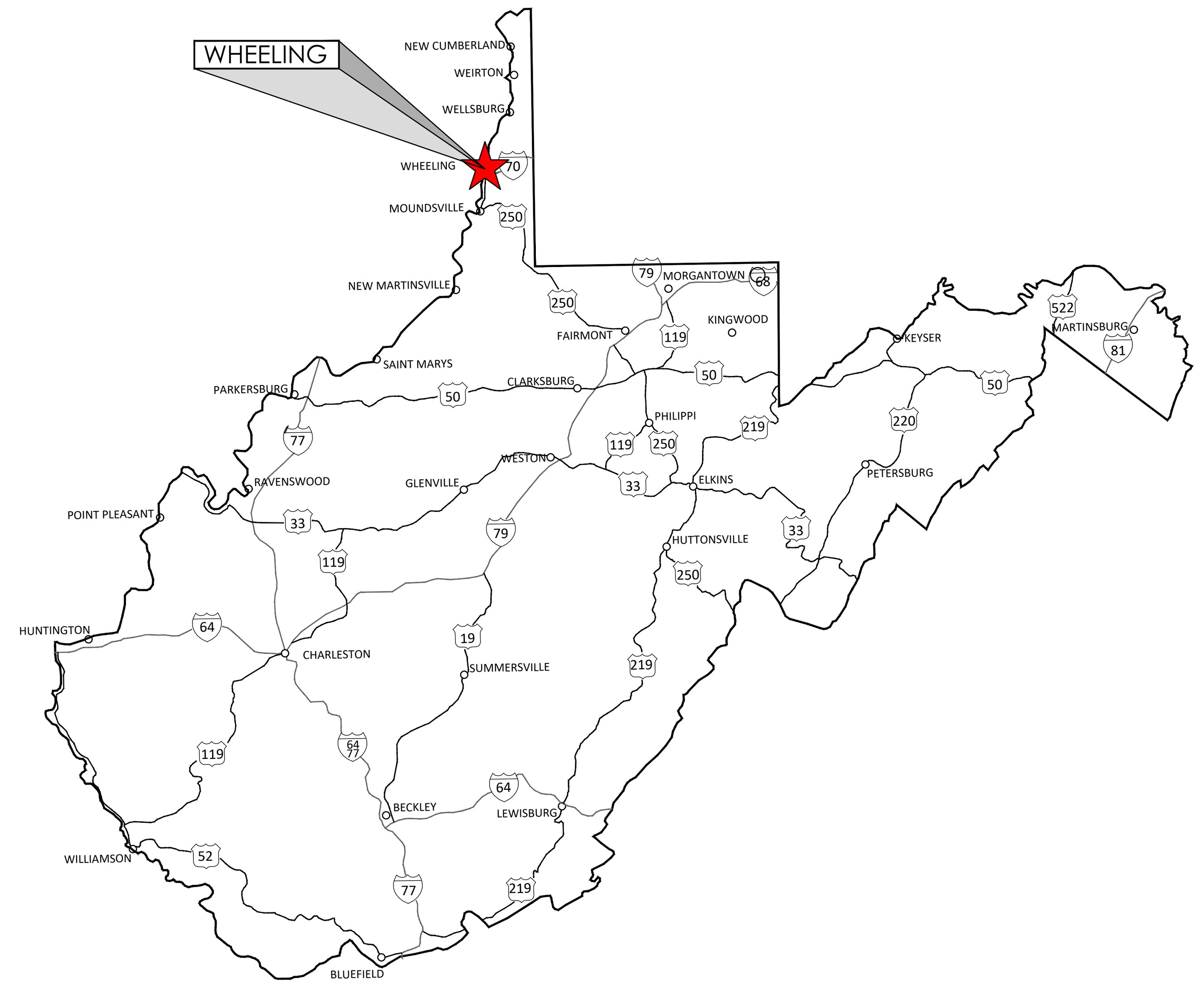

STATE MAP

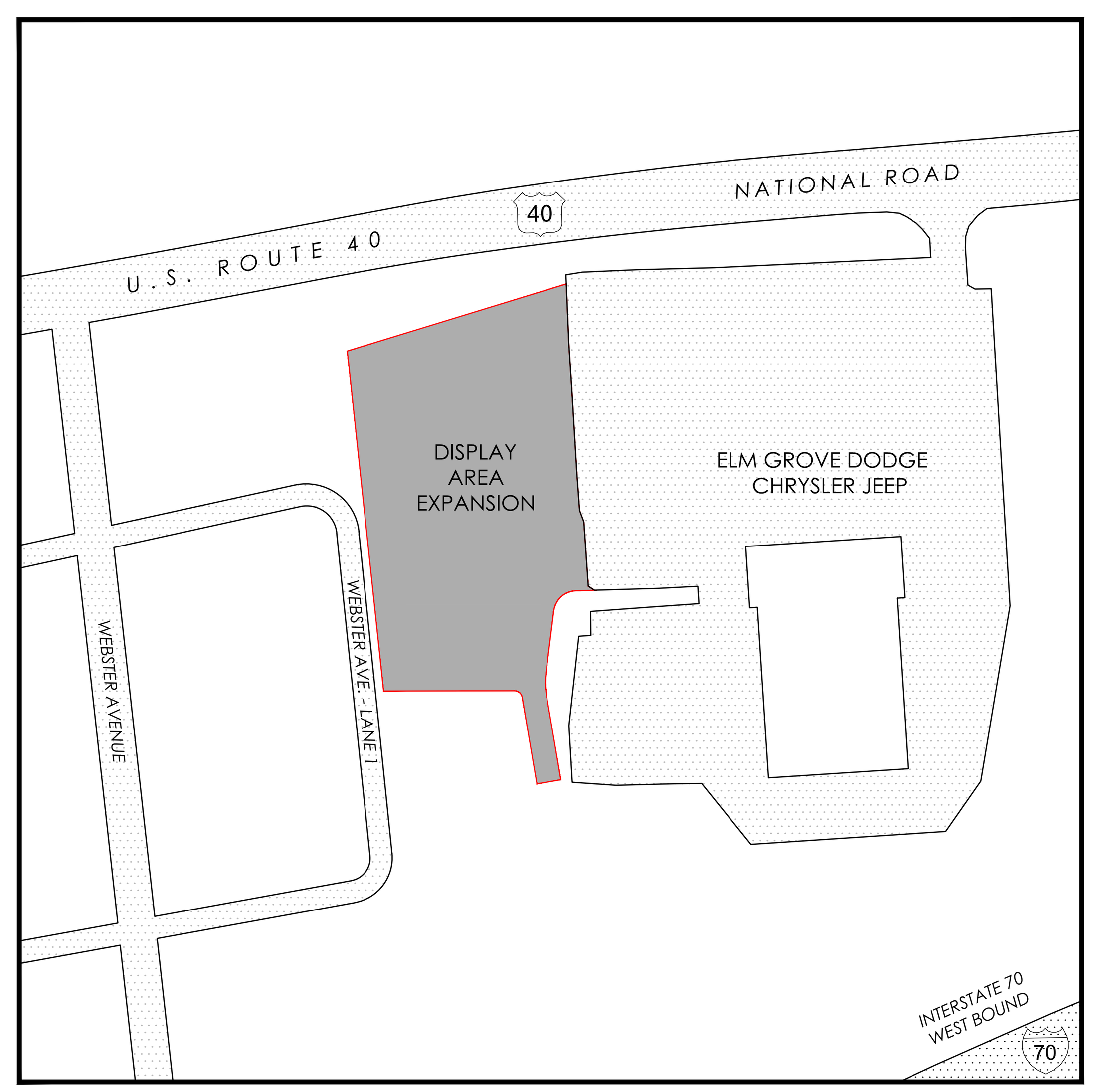

VICINITY MAP

Scale: 1" = 100'

0 100 200 300

DRAWING INDEX

Sheet CS	Cover Sheet
Sheet C001	Existing Conditions & Demolition Plan
Sheet C100	Site Plan
Sheet C101	Site Details
Sheet C200	Site Grading & Drainage Plan
Sheet C201	Storm Profiles & Details
Sheet C202	ADS Storm Chamber Details
Sheet C300	Stormwater Pollution Prevention Plan
Sheet C301	Stormwater Pollution Prevention Details

Call Two Working Days Before You Dig
WEST VIRGINIA 811
CALL BEFORE YOU DIG! Dial 811 or 800.245.4848 www.WV811.com

OIL & GAS PRODUCERS UNDERGROUND PROTECTION SERVICE (www.ogpups.com)
1-800-925-0988

THE LOCATIONS OF EXISTING UNDERGROUND UTILITIES ARE SHOWN APPROXIMATELY, BASED EITHER ON REPORTING BY RESPECTIVE OWNERS AND/OR BY FIELD LOCATION. HOWEVER, THE CONTRACTOR SHALL DETERMINE THE EXACT LOCATION OF ALL EXISTING UTILITIES PRIOR TO COMMENCING WORK AND AGREES TO BE FULLY RESPONSIBLE FOR ALL DAMAGES THAT MIGHT OCCUR BY THE CONTRACTOR'S FAILURE TO EXACTLY LOCATE AND PRESERVE ALL UNDERGROUND UTILITIES.

MAPPING NOTES

Mapping provided by:
JHA Companies
68011 Vineyard Road,
St. Clairsville, Ohio 43950
P: 740-827-1500
Attn. Rich Grimes

Chadan Engineering, Inc. assumes no responsibly for the accuracy and/or completeness of the provided surveying and mapping information nor any errors or omissions resulting from missing or inaccurate data.

CHADAN ENGINEERING, INC.
171 West Main Street
P.O. Box 695
St. Clairsville, Ohio 43950
Office: 740.449.2194
chadanengineering.com

CHARLES M. GARVICK REGISTERED # 014858 STATE OF WEST VIRGINIA PROFESSIONAL ENGINEER

FOR PERMIT

CLIENT:
Don Steen
Commercial Contract Services, LLC
1199 N. Memorial Drive, Suite 361
Lancaster, Ohio 43130
C: 740.438.2914

ELM GROVE DODGE CHRYSLER & JEEP
Parking Lot Expansion
2538 National Road,
Wheeling, West Virginia 26003

ISSUE	REVISIONS	DATE

DATE ISSUED: 03-05-2026
DRAWN: RLL CHECKED: CMG

NOTES:

Cover Sheet

CS

March 05, 2026 - 8:54am Q:\Jobs\2025\Commercial Contract Services - Elm Grove Dodge\Drawings\Elm Grove Dodge Expansion-WIP.dwg

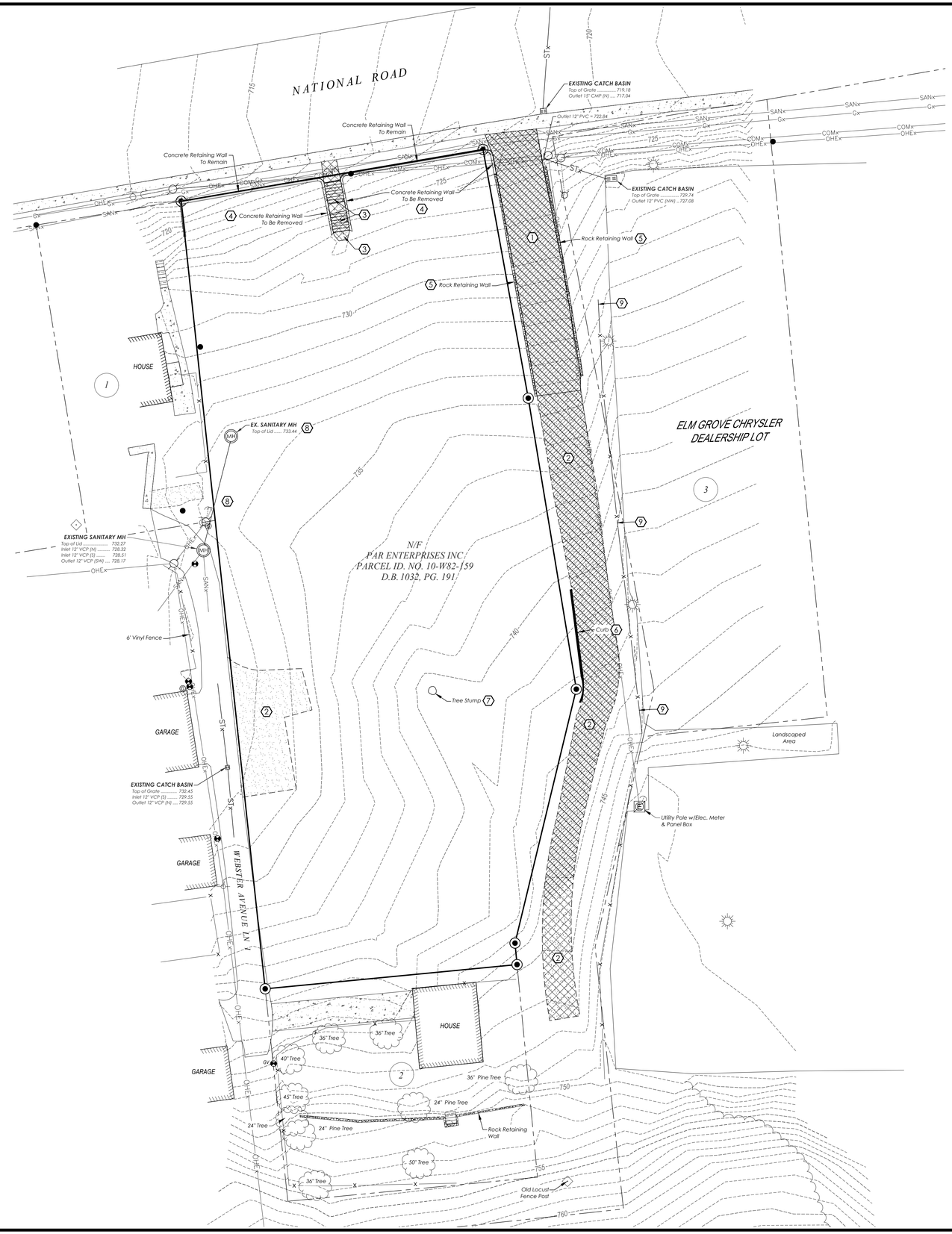

PLAN VIEW

SCALE 1" = 20'

0 20 40 60

LEGEND

- Property Boundary
- Right of Way Limits
- Property Monument - Iron Pin Set
- Property Monument - Iron Pin Found
- 665 Existing Grade Contour (Index)
- Existing Grade Contour (Intermediate
- × 671.32 Existing Grade Spot Elevation
- Existing Fence - Chain Link
- X Existing Fence - Wood
- Existing Light Pole
- Existing Utility Pole
- Existing Guy Wire
- COMx Existing Overhead Communications
- OHEx Existing Overhead Electric
- UGEx Existing Underground Electric
- Existing Electric Box
- Existing Electric Meter
- Gx Existing Gas Line
- Existing Gas Line Marker
- GV Existing Gas Valve
- Existing Sanitary Manhole
- SANx Existing Sanitary Sewer
- CO Existing Sanitary Cleanout
- STx Existing Storm Sewer
- Existing Storm Catch Basin
- Wx Existing Water Line
- Existing Water Valve
- W Existing Water Meter
- FH Existing Hydrant
- Existing Sign
- Existing Mailbox
- Existing Post, Gate Post
- Existing Tree
- Existing Asphalt Surface
- Existing Aggregate/Gravel Surface
- Existing Concrete
- Existing Surface To Be Demolished
- 665 Proposed Grade Contour (Index)
- Proposed Grade Contour (Intermediate)
- 657.50 × Proposed Grade Spot Elevation
- Proposed Storm Sewer Structure
- Proposed Storm Sewer Manhole
- Proposed Storm Sewer Piping
- Proposed Concrete Surface
- Proposed Asphalt Pavement

DEMOLITION NOTES

1. Remove existing asphalt pavement.
2. Remove existing aggregate surface.
3. Remove existing concrete sidewalk and stairs.
4. Remove existing concrete retaining wall. Protect existing public sidewalk.
5. Remove existing stacked rock retaining wall.
6. Remove existing curb.
7. Remove existing tree stump.
8. Remove existing sanitary sewer structure and associated piping. Line to be capped. Contact City of Wheeling Water Pollution Control Department at P: 304-639-8344, prior to commencing the line abandonment work.
9. Remove existing fence.

CHADAN ENGINEERING, INC.

171 West Main Street
P.O. Box 695
St. Clairsville, Ohio 43950
Office: 740.449.2194
chadanengineering.com

CHARLES M. GARVICK
REGISTERED
014858
STATE OF WEST VIRGINIA
PROFESSIONAL ENGINEER

FOR PERMIT

CLIENT:
Don Steen
Commercial Contract Services, LLC
1199 N. Memorial Drive, Suite 361
Lancaster, Ohio 43130
C: 740.438.2914

ELM GROVE DODGE CHRYSLER & JEEP

Parking Lot Expansion

2538 National Road,
Wheeling, West Virginia 26003

ISSUE	REVISIONS	DATE

DATE ISSUED: 03-05-2026
DRAWN: RLL CHECKED: CMG

NOTES:

Existing Conditions & Demolition Plan

C001

Elm Grove Dodge Chrysler & Jeep - Parking Lot Expansion

N
W E
S

LEGEND

- Property Boundary
- Right of Way Limits
- Property Monument - Iron Pin Set
- Property Monument - Iron Pin Found
- 665 — Existing Grade Contour (Index)
- Existing Grade Contour (Intermediate)
- × 671.32 — Existing Grade Spot Elevation
- Existing Fence - Chain Link
- X — Existing Fence - Wood
- Existing Light Pole
- Existing Utility Pole
- Existing Guy Wire
- COMx — Existing Overhead Communications
- OHEx — Existing Overhead Electric
- UGEx — Existing Underground Electric
- E — Existing Electric Box
- Existing Electric Meter
- Gx — Existing Gas Line
- Existing Gas Line Marker
- GV — Existing Gas Valve
- Existing Sanitary Manhole
- SANx — Existing Sanitary Sewer
- CO — Existing Sanitary Cleanout
- STx — Existing Storm Sewer
- Existing Storm Catch Basin
- Wx — Existing Water Line
- Existing Water Valve
- W — Existing Water Meter
- FH — Existing Hydrant
- Existing Sign
- Existing Mailbox
- Existing Post, Gate Post
- Existing Tree
- Existing Asphalt Surface
- Existing Aggregate/Gravel Surface
- Existing Concrete
- Existing Surface To Be Demolished
- 665 — Proposed Grade Contour (Index)
- Proposed Grade Contour (Intermediate)
- 657.50 × — Proposed Grade Spot Elevation
- Proposed Storm Sewer Structure
- Proposed Storm Sewer Manhole
- Proposed Storm Sewer Piping
- Proposed Concrete Surface
- Proposed Asphalt Pavement

CODED NOTES

1. New retaining wall as needed to infill the former stairway area. Design by others.
2. New retaining wall with pipe openings. Design by others.
3. Saw-cut edge of existing asphalt where new pavement will be installed.
4. Terminate curb. Transition from full-height to zero in 4.00 feet.

DETAILS

- 1 C101 — Asphalt Pavement
- 2 C101 — Concrete Paving
- 3 C101 — Concrete Curb

SHEET NOTES

1. Lighting plan by others.
2. All disturbed areas not used for asphalt pavement are to be seeded and mulched.

PLAN VIEW
SCALE 1" = 20'
0 20 40 60

CHADAN ENGINEERING, INC.
171 West Main Street
P.O.Box 695
St. Clairsville, Ohio 43950
Office: 740.449.2194
chadanengineering.com

CHARLES M. GARTON REGISTERED PROFESSIONAL ENGINEER # 014858 STATE OF WEST VIRGINIA
FOR PERMIT

CLIENT:
Don Steen
Commercial Contract Services, LLC
1199 N. Memorial Drive, Suite 361
Lancaster, Ohio 43130
C: 740.438.2914

ELM GROVE DODGE CHRYSLER & JEEP
Parking Lot Expansion
2538 National Road,
Wheeling, West Virginia 26003

ISSUE | REVISIONS | DATE

DATE ISSUED: 03-05-2026
DRAWN: RLL CHECKED: CMG

NOTES:

Site Plan

C100

March 05, 2026 8:34am Q:\Work\2201\Commercial Contract Services - Elm Grove Dodge\Drawings\Elm Grove Dodge Expansion.dwg

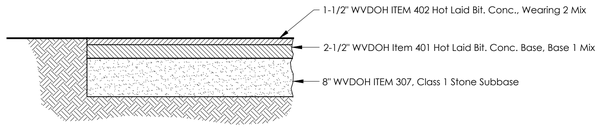

WVDOH 207 Subgrade Compaction & Proof Rolling
All work and materials shall comply with the latest edition of the West Virginia Department of Highways, Standard Specifications Roads & Bridges.
Existing asphalt to be sawcut where new pavement will be installed against existing. Elevations of new pavement to match existing.

1 ASPHALT PAVEMENT
NOT TO SCALE

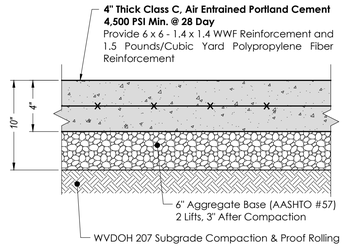

2 CONCRETE PAVING
NOT TO SCALE

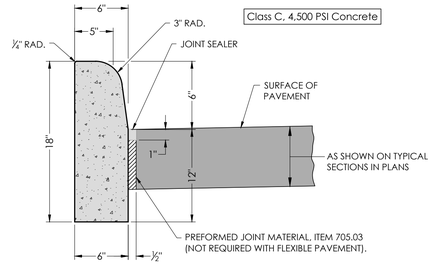

5 CONCRETE CURB
NOT TO SCALE

CHADAN ENGINEERING, INC.
171 West Main Street
P.O. Box 695
St. Clairsville, Ohio 43950
Office: 740.449.2194
chadanengineering.com

CHARLES M. GARVICK
REGISTERED
014858
STATE OF
WEST VIRGINIA
PROFESSIONAL ENGINEER

FOR PERMIT

CLIENT:
Don Steen
Commercial Contract Services, LLC
1199 N. Memorial Drive, Suite 361
Lancaster, Ohio 43130
C: 740.438.2914

ELM GROVE DODGE CHRYSLER & JEEP
Parking Lot Expansion
2538 National Road,
Wheeling, West Virginia 26003

ISSUE	REVISIONS	DATE

DATE ISSUED: 03-05-2026
DRAWN: RLL CHECKED: CMG

NOTES:

Site Details

C101

Elm Grove Dodge Chrysler & Jeep - Parking Lot Expansion

PLAN VIEW

SCALE 1" = 20'

0 20 40 60

LEGEND

- Property Boundary
- Right of Way Limits
- Property Monument - Iron Pin Set
- Property Monument - Iron Pin Found
- Existing Grade Contour (Index)
- Existing Grade Contour (Intermediate
- Existing Grade Spot Elevation
- Existing Fence - Chain Link
- Existing Fence - Wood
- Existing Light Pole
- Existing Utility Pole
- Existing Guy Wire
- Existing Overhead Communications
- Existing Overhead Electric
- Existing Underground Electric
- Existing Electric Box
- Existing Electric Meter
- Existing Gas Line
- Existing Gas Line Marker
- Existing Gas Valve
- Existing Sanitary Manhole
- Existing Sanitary Sewer
- Existing Sanitary Cleanout
- Existing Storm Sewer
- Existing Storm Catch Basin
- Existing Water Line
- Existing Water Valve
- Existing Water Meter
- Existing Hydrant
- Existing Sign
- Existing Mailbox
- Existing Post, Gate Post
- Existing Tree
- Existing Asphalt Surface
- Existing Aggregate/Gravel Surface
- Existing Concrete
- Existing Surface To Be Demolished
- Proposed Grade Contour (Index)
- Proposed Grade Contour (Intermediate)
- Proposed Grade Spot Elevation
- Proposed Storm Sewer Structure
- Proposed Storm Sewer Manhole
- Proposed Storm Sewer Piping
- Proposed Concrete Surface
- Proposed Asphalt Pavement

CODED NOTES

1. Provide a new 45° bend at end of existing 12" PVC storm pipe and extend pipe through face of new retaining wall. Invert to be 720.25.
2. Underground stormwater detention system. See Sheets C201 and C202 for details.
3. Provide openings through wall for storm sewer pipes. Invert to be 720.25.
4. Provide Type D rock riprap: 35' L x 5' W x 12" D with geotextile underlayment.

DETAILS

- ADS Underground Detention System
- ST-5 Outlet Control Structure

SHEET NOTES

The Contractor is required to backfill sidewalks and curbs to match finish concrete grade. Top soil depth shall be 4" minimum.

Sedimentation inlet controls shall be installed and maintained at all storm inlets. All proposed storm sewer pipe shall be ADS N-12, WT (water-tight), high density polyethylene (HDPE) or equal. Castings shall be shimmed to match proposed grades.

All disturbed areas not used for asphalt pavement are to be seeded and mulched.

CHADAN ENGINEERING, INC.

171 West Main Street
P.O. Box 695
St. Clairsville, Ohio 43950
Office: 740.449.2194
chadanengineering.com

CHARLES M. GARVICK REGISTERED # 014858 STATE OF WEST VIRGINIA PROFESSIONAL ENGINEER

FOR PERMIT

CLIENT:
Don Steen
Commercial Contract Services, LLC
1199 N. Memorial Drive, Suite 361
Lancaster, Ohio 43130
C: 740.438.2914

ELM GROVE DODGE CHRYSLER & JEEP

Parking Lot Expansion

2538 National Road,
Wheeling, West Virginia 26003

ISSUE	REVISIONS	DATE

DATE ISSUED: 03-05-2026
DRAWN: RLL CHECKED: CMG

NOTES:

Site Grading & Drainage Plan

C200

Elm Grove Dodge Chrysler & Jeep - Parking Lot Expansion

Proposed Structure ~ ST-1
Top of Grade 733.60
Outlet 12" (E) 729.60
WVDOT Type F Inlet Precast Conc.
EJ 7536 Frame & 5425 M2 Grade

Proposed Structure ~ ST-1A
Top of Grade 731.38
Inlet 18" (N) 722.20
Inlet 12" (S) 727.00
Outlet 24" (E) 722.20
WVDOH Type A Manhole
EJ 1045 Frame & Type M2 Flat Bar Grate

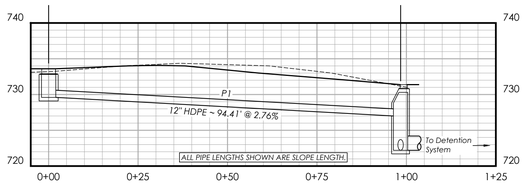

1 STORM PROFILE ~ ST-1 TO ST-1A
SCALE: 1" = 20' (H), 1" = 10' (V)

Proposed Structure ~ ST-2
Top of Grade 729.50
Outlet 12" (SE) 725.50
WVDOT Type F Inlet Precast Conc.
EJIW 7536 Frame & 5425 M2 Grade

Proposed Structure ~ ST-2A
Top of Grade 730.68
Inlet 12" (NW) 725.00
Inlet 18" (S) 722.20
Outlet 24" (E) 722.20
WVDOH Type A Manhole
EJ 1045 Frame & Type M2 Flat Bar Grate

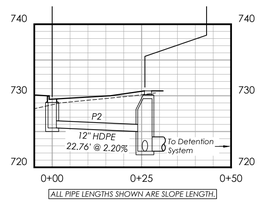

2 STORM PROFILE ~ ST-2 TO ST-2A
SCALE: 1" = 20' (H), 1" = 10' (V)

Proposed Structure ~ ST-3
Top of Grade 730.20
Outlet 12" (S) 726.20
WVDOT Type F Inlet Precast Conc.
EJIW 7536 Frame & 5425 M2 Grade

Proposed Structure ~ ST-4
Top of Grade 732.95
Inlet 12" (N) 725.75
Outlet 24" (W) 722.20
WVDOH Type A Manhole
EJ 1045 Frame & Type M2 Flat Bar Grate

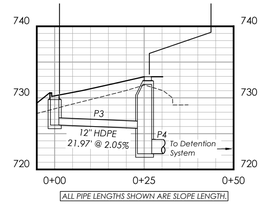

3 STORM PROFILE ~ ST-3 TO ST-4
SCALE: 1" = 20' (H), 1" = 10' (V)

Proposed Structure ~ ST-5
Top of Grade 731.91
Inlet 6" (NW) 721.25
Inlet 24" (W) 722.20
Outlet 15" (N) 721.25
WVDOH Type A Manhole
EJ 1045 Frame & Type M2 Flat Bar Grate

Retaining Wall
Outlet 12" HDPE 720.25
Outlet 15" HDPE 720.25

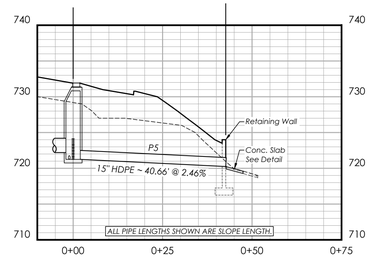

4 STORM PROFILE ~ ST-5 TO ST-6
SCALE: 1" = 20' (H), 1" = 10' (V)

PROPOSED LAYOUT

28	STORMTECH MC-7200 CHAMBERS
4	STORMTECH MC-7200 END CAPS
12	STONE ABOVE (in)
9	STONE BELOW (in)
40	% STONE VOID
7,460	**INSTALLED SYSTEM VOLUME (CF) (PERIMETER STONE INCLUDED) ABOVE ELEVATION 721.25**
3,384	**INSTALLED SYSTEM WATER QUALITY VOLUME (CF) BETWEEN ELEVATIONS 721.25 & 723.75 (PERIMETER STONE INCLUDED)**
2.40	**INSTALLED SYSTEM WATER QUALITY FLOW RATE (CFS)**
1937	SYSTEM AREA (ft²)
239	SYSTEM PERIMETER (ft)

PROPOSED ELEVATIONS

734.00	MAXIMUM ALLOWABLE GRADE (TOP OF PAVEMENT/UNPAVED)
729.00	MINIMUM ALLOWABLE GRADE (UNPAVED WITH TRAFFIC)
729.00	MINIMUM ALLOWABLE GRADE (UNPAVED NO TRAFFIC)
729.00	MINIMUM ALLOWABLE GRADE (BASE OF FLEXIBLE PAVEMENT)
729.33	MINIMUM ALLOWABLE GRADE (TOP OF RIGID PAVEMENT)
728.00	TOP OF STONE
727.00	TOP OF MC-7200 CHAMBER
722.00	18" TOP MANIFOLD/CONNECTION INVERT
N/A	24" ISOLATOR ROW PLUS CONNECTION INVERT
N/A	24" BOTTOM MANIFOLD/CONNECTION INVERT
722.00	BOTTOM OF MC-7200 CHAMBER
721.25	UNDERDRAIN INVERT
721.25	BOTTOM OF STONE

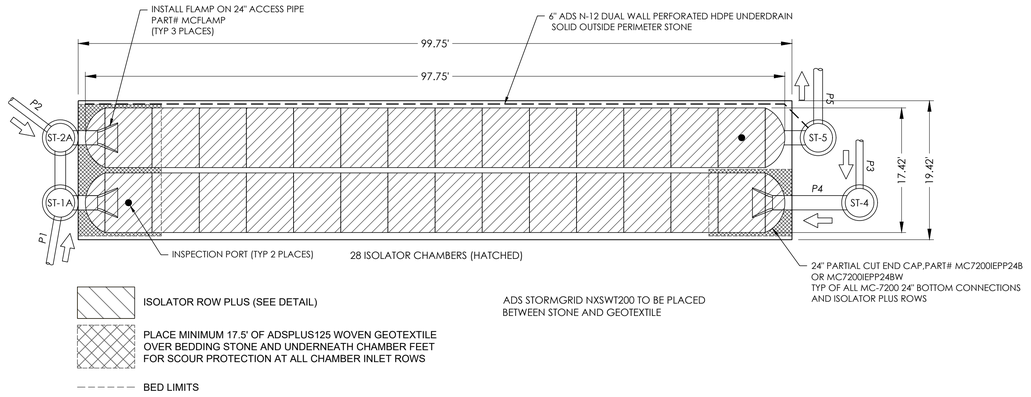

5 ADS UNDERGROUND DETENTION SYSTEM
SCALE: 1" = 10'

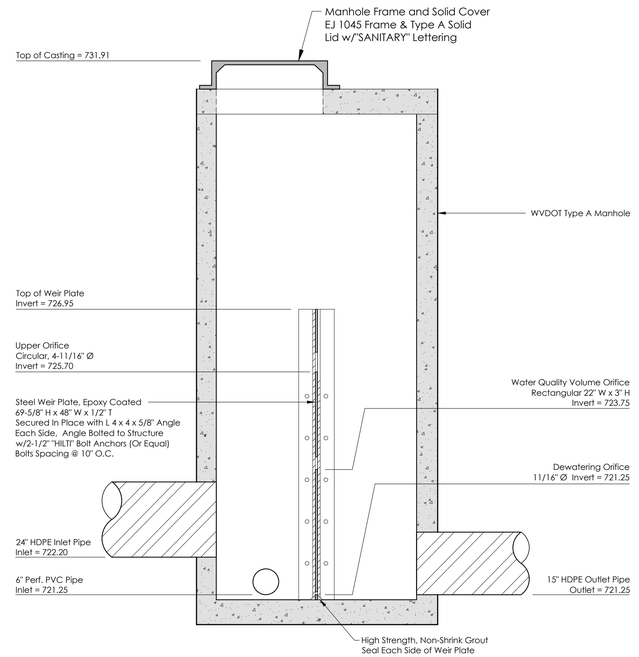

6 ST-5 OUTLET CONTROL STRUCTURE
NOT TO SCALE

CHADAN ENGINEERING, INC.
171 West Main Street
P.O.Box 695
St. Clairsville, Ohio 43950
Office: 740.449.2194
chadanengineering.com

CHARLES M. GARTLAN REGISTERED # 014858 STATE OF WEST VIRGINIA PROFESSIONAL ENGINEER
FOR PERMIT

CLIENT:
Don Steen
Commercial Contract Services, LLC
1199 N. Memorial Drive, Suite 361
Lancaster, Ohio 43130
C: 740.438.2914

ELM GROVE DODGE CHRYSLER & JEEP
Parking Lot Expansion
2538 National Road,
Wheeling, West Virginia 26003

ISSUE | REVISIONS | DATE

DATE ISSUED: 03-05-2026
DRAWN: RLL CHECKED: CMG

NOTES:

Storm Profiles & Details

C201

Wednesday, 2026 - 8:54am - G:\Work\2025\Commercial Contract Services - Elm Grove Dodge\Drawings\Elm Grove Dodge Expansion.dwg

ACCEPTABLE FILL MATERIALS: STORMTECH MC-7200 CHAMBER SYSTEMS

MATERIAL LOCATION		DESCRIPTION	AASHTO MATERIAL CLASSIFICATIONS	COMPACTION / DENSITY REQUIREMENT
D	**FINAL FILL:** FILL MATERIAL FOR LAYER 'D' STARTS FROM THE TOP OF THE 'C' LAYER TO THE BOTTOM OF FLEXIBLE PAVEMENT OR UNPAVED FINISHED GRADE ABOVE. NOTE THAT PAVEMENT SUBBASE MAY BE PART OF THE 'D' LAYER	ANY SOIL/ROCK MATERIALS, NATIVE SOILS, OR PER ENGINEER'S PLANS. CHECK PLANS FOR PAVEMENT SUBGRADE REQUIREMENTS.	N/A	PREPARE PER SITE DESIGN ENGINEER'S PLANS. PAVED INSTALLATIONS MAY HAVE STRINGENT MATERIAL AND PREPARATION REQUIREMENTS.
C	**INITIAL FILL:** FILL MATERIAL FOR LAYER 'C' STARTS FROM THE TOP OF THE EMBEDMENT STONE ('B' LAYER) TO 24" (600 mm) ABOVE THE TOP OF THE CHAMBER. NOTE THAT PAVEMENT SUBBASE MAY BE A PART OF THE 'C' LAYER.	GRANULAR WELL-GRADED SOIL/AGGREGATE MIXTURES, <35% FINES OR PROCESSED AGGREGATE. MOST PAVEMENT SUBBASE MATERIALS CAN BE USED IN LIEU OF THIS LAYER.	AASHTO M145[1] A-1, A-2-4, A-3 OR AASHTO M43[1] 3, 357, 4, 467, 5, 56, 57, 6, 67, 68, 7, 78, 8, 89, 9, 10	BEGIN COMPACTIONS AFTER 24" (600 mm) OF MATERIAL OVER THE CHAMBERS IS REACHED. COMPACT ADDITIONAL LAYERS IN 12" (300 mm) MAX LIFTS TO A MIN. 95% PROCTOR DENSITY FOR WELL GRADED MATERIAL AND 95% RELATIVE DENSITY FOR PROCESSED AGGREGATE MATERIALS.
B	**EMBEDMENT STONE:** FILL SURROUNDING THE CHAMBERS FROM THE FOUNDATION STONE ('A' LAYER) TO THE 'C' LAYER ABOVE.	CLEAN, CRUSHED, ANGULAR STONE	AASHTO M43[1] 3, 4	NO COMPACTION REQUIRED.
A	**FOUNDATION STONE:** FILL BELOW CHAMBERS FROM THE SUBGRADE UP TO THE FOOT (BOTTOM) OF THE CHAMBER.	CLEAN, CRUSHED, ANGULAR STONE	AASHTO M43[1] 3, 4	PLATE COMPACT OR ROLL TO ACHIEVE A FLAT SURFACE.[2,3]

PLEASE NOTE:
1. THE LISTED AASHTO DESIGNATIONS ARE FOR GRADATIONS ONLY. THE STONE MUST ALSO BE CLEAN, CRUSHED, ANGULAR. FOR EXAMPLE, A SPECIFICATION FOR #4 STONE WOULD STATE: "CLEAN, CRUSHED, ANGULAR NO. 4 (AASHTO M43) STONE".
2. STORMTECH COMPACTION REQUIREMENTS ARE MET FOR 'A' LOCATION MATERIALS WHEN PLACED AND COMPACTED IN 9" (230 mm) (MAX) LIFTS USING TWO FULL COVERAGES WITH A VIBRATORY COMPACTOR.
3. WHERE INFILTRATION SURFACES MAY BE COMPROMISED BY COMPACTION, FOR STANDARD DESIGN LOAD CONDITIONS, A FLAT SURFACE MAY BE ACHIEVED BY RAKING OR DRAGGING WITHOUT COMPACTION EQUIPMENT. FOR SPECIAL LOAD DESIGNS, CONTACT STORMTECH FOR COMPACTION REQUIREMENTS.
4. ONCE LAYER 'C' IS PLACED, ANY SOIL/MATERIAL CAN BE PLACED IN LAYER 'D' UP TO THE FINISHED GRADE. MOST PAVEMENT SUBBASE SOILS CAN BE USED TO REPLACE THE MATERIAL REQUIREMENTS OF LAYER 'C' OR 'D' AT THE SITE DESIGN ENGINEER'S DISCRETION.

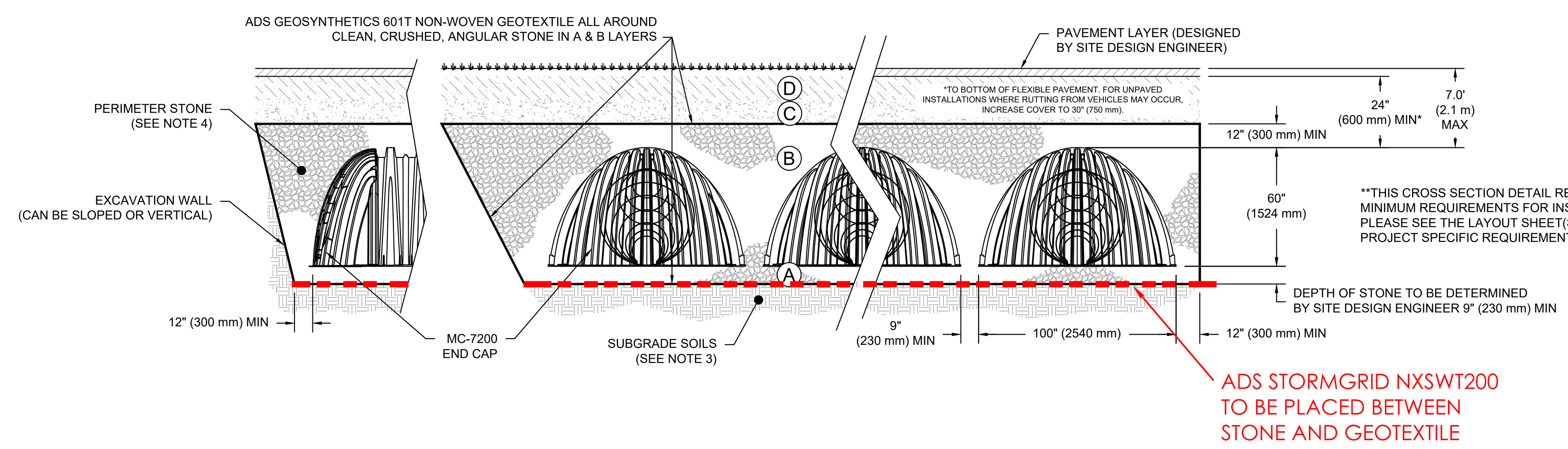

NOTES:

1. CHAMBERS SHALL MEET THE REQUIREMENTS OF ASTM F2418, "STANDARD SPECIFICATION FOR POLYPROPYLENE (PP) CORRUGATED WALL STORMWATER COLLECTION CHAMBERS" CHAMBER CLASSIFICATION 60x101
2. MC-7200 CHAMBERS SHALL BE DESIGNED IN ACCORDANCE WITH ASTM F2787 "STANDARD PRACTICE FOR STRUCTURAL DESIGN OF THERMOPLASTIC CORRUGATED WALL STORMWATER COLLECTION CHAMBERS".
3. THE SITE DESIGN ENGINEER IS RESPONSIBLE FOR ASSESSING THE BEARING RESISTANCE (ALLOWABLE BEARING CAPACITY) OF THE SUBGRADE SOILS AND THE DEPTH OF FOUNDATION STONE WITH CONSIDERATION FOR THE RANGE OF EXPECTED SOIL MOISTURE CONDITIONS.
4. PERIMETER STONE MUST BE EXTENDED HORIZONTALLY TO THE EXCAVATION WALL FOR BOTH VERTICAL AND SLOPED EXCAVATION WALLS.
5. REQUIREMENTS FOR HANDLING AND INSTALLATION:
   - TO MAINTAIN THE WIDTH OF CHAMBERS DURING SHIPPING AND HANDLING, CHAMBERS SHALL HAVE INTEGRAL, INTERLOCKING STACKING LUGS.
   - TO ENSURE A SECURE JOINT DURING INSTALLATION AND BACKFILL, THE HEIGHT OF THE CHAMBER JOINT SHALL NOT BE LESS THAN 3".
   - TO ENSURE THE INTEGRITY OF THE ARCH SHAPE DURING INSTALLATION, a) THE ARCH STIFFNESS CONSTANT AS DEFINED IN SECTION 6.2.8 OF ASTM F2418 SHALL BE GREATER THAN OR EQUAL TO 500 LBS/FT/%. AND b) TO RESIST CHAMBER DEFORMATION DURING INSTALLATION AT ELEVATED TEMPERATURES (ABOVE 73° F / 23° C), CHAMBERS SHALL BE PRODUCED FROM REFLECTIVE GOLD OR YELLOW COLORS.

1 MC-7200 CROSS SECTION DETAIL

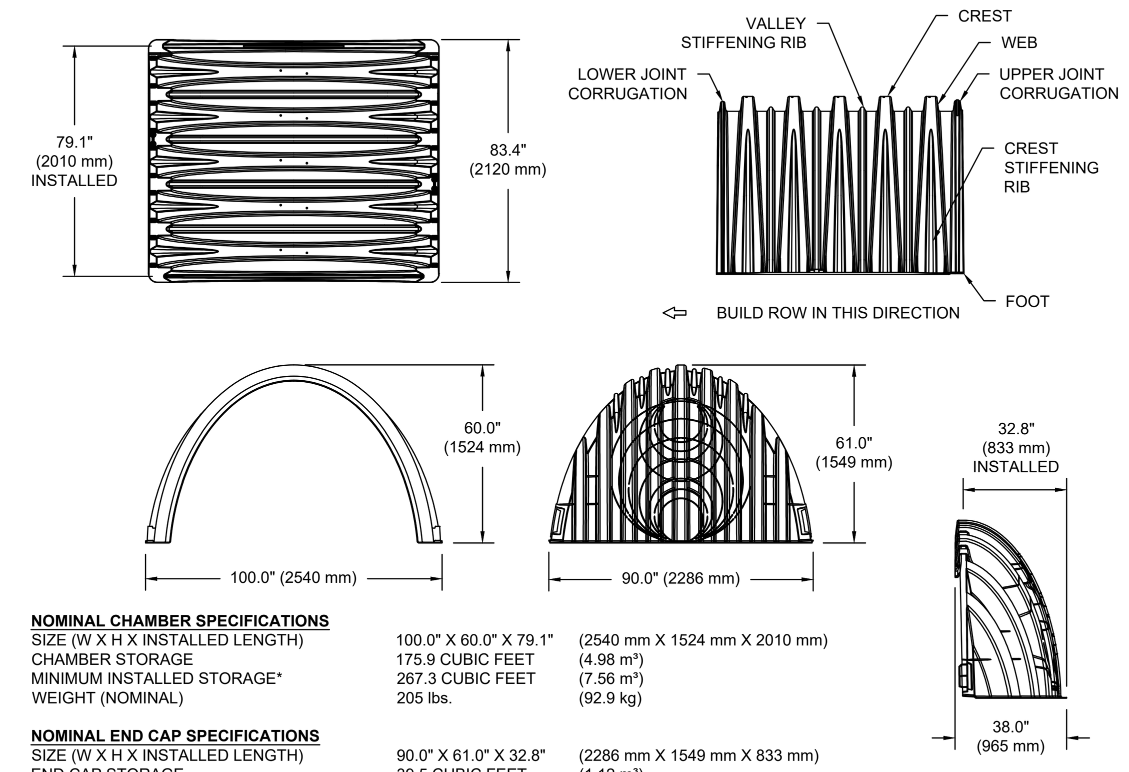

NOMINAL CHAMBER SPECIFICATIONS

SIZE (W X H X INSTALLED LENGTH)	100.0" X 60.0" X 79.1"	(2540 mm X 1524 mm X 2010 mm)
CHAMBER STORAGE	175.9 CUBIC FEET	(4.98 m³)
MINIMUM INSTALLED STORAGE*	267.3 CUBIC FEET	(7.56 m³)
WEIGHT (NOMINAL)	205 lbs.	(92.9 kg)

NOMINAL END CAP SPECIFICATIONS

SIZE (W X H X INSTALLED LENGTH)	90.0" X 61.0" X 32.8"	(2286 mm X 1549 mm X 833 mm)
END CAP STORAGE	39.5 CUBIC FEET	(1.12 m³)
MINIMUM INSTALLED STORAGE*	115.3 CUBIC FEET	(3.26 m³)
WEIGHT (NOMINAL)	90 lbs.	(40.8 kg)

*ASSUMES 12" (305 mm) STONE ABOVE, 9" (229 mm) STONE FOUNDATION AND BETWEEN CHAMBERS, 12" (305 mm) STONE PERIMETER IN FRONT OF END CAPS AND 40% STONE POROSITY.

PARTIAL CUT HOLES AT BOTTOM OF END CAP FOR PART NUMBERS ENDING WITH "B"
PARTIAL CUT HOLES AT TOP OF END CAP FOR PART NUMBERS ENDING WITH "T"
END CAPS WITH A PREFABRICATED WELDED STUB END WITH "W"

PART #	STUB	B	C
MC7200IEPP06T	6" (150 mm)	42.54" (1081 mm)	---
MC7200IEPP06B		---	0.86" (22 mm)
MC7200IEPP08T	8" (200 mm)	40.50" (1029 mm)	---
MC7200IEPP08B		---	1.01" (26 mm)
MC7200IEPP10T	10" (250 mm)	38.37" (975 mm)	---
MC7200IEPP10B		---	1.33" (34 mm)
MC7200IEPP12T	12" (300 mm)	35.69" (907 mm)	---
MC7200IEPP12B		---	1.55" (39 mm)
MC7200IEPP15T	15" (375 mm)	32.72" (831 mm)	---
MC7200IEPP15B		---	1.70" (43 mm)
MC7200IEPP18T	18" (450 mm)	29.36" (746 mm)	---
MC7200IEPP18TW			
MC7200IEPP18B		---	1.97" (50 mm)
MC7200IEPP18BW			
MC7200IEPP24T	24" (600 mm)	23.05" (585 mm)	---
MC7200IEPP24TW			
MC7200IEPP24B		---	2.26" (57 mm)
MC7200IEPP24BW			
MC7200IEPP30BW	30" (750 mm)	---	2.95" (75 mm)
MC7200IEPP36BW	36" (900 mm)	---	3.25" (83 mm)
MC7200IEPP42BW	42" (1050 mm)	---	3.55" (90 mm)

NOTE: ALL DIMENSIONS ARE NOMINAL

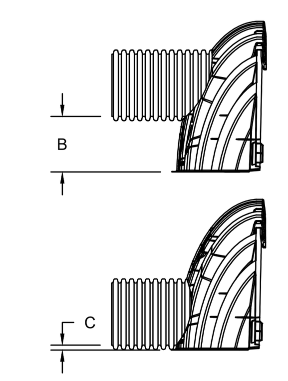

CUSTOM PREFABRICATED INVERTS ARE AVAILABLE UPON REQUEST. INVENTORIED MANIFOLDS INCLUDE 12-24" (300-600 mm) SIZE ON SIZE AND 15-48" (375-1200 mm) ECCENTRIC MANIFOLDS. CUSTOM INVERT LOCATIONS ON THE MC-7200 END CAP CUT IN THE FIELD ARE NOT RECOMMENDED FOR PIPE SIZES GREATER THAN 10" (250 mm). THE INVERT LOCATION IN COLUMN 'B' ARE THE HIGHEST POSSIBLE FOR THE PIPE SIZE.

2 MC-7200 TECHNICAL SPECIFICATIONS

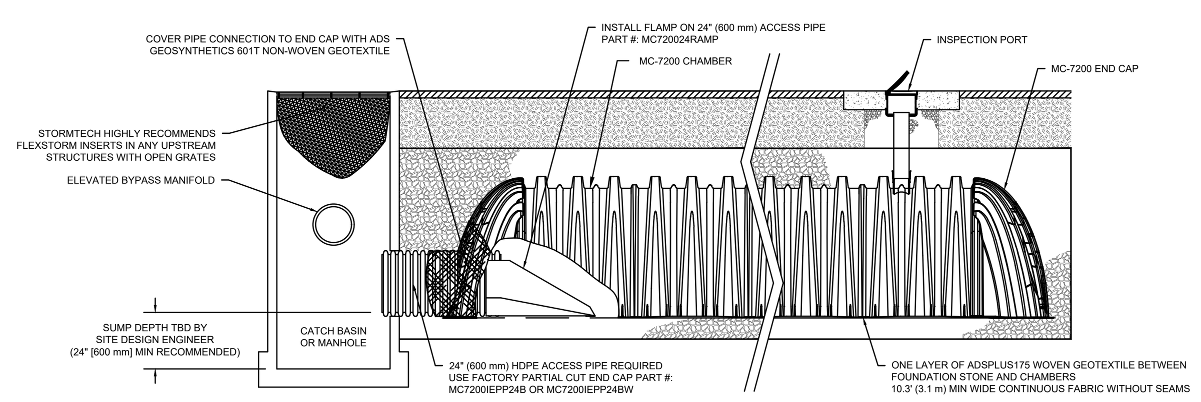

INSPECTION & MAINTENANCE

STEP 1) INSPECT ISOLATOR ROW PLUS FOR SEDIMENT
- A. INSPECTION PORTS
  - A.1. REMOVE/OPEN LID ON NYLOPLAST INLINE DRAIN
  - A.2. REMOVE AND CLEAN FLEXSTORM FILTER IF INSTALLED
  - A.3. USING A FLASHLIGHT AND STADIA ROD, MEASURE DEPTH OF SEDIMENT AND RECORD ON MAINTENANCE LOG
  - A.4. LOWER A CAMERA INTO ISOLATOR ROW PLUS FOR VISUAL INSPECTION OF SEDIMENT LEVELS (OPTIONAL)
  - A.5. IF SEDIMENT IS AT, OR ABOVE, 3" (80 mm) PROCEED TO STEP 2. IF NOT, PROCEED TO STEP 3.
- B. ALL ISOLATOR PLUS ROWS
  - B.1. REMOVE COVER FROM STRUCTURE AT UPSTREAM END OF ISOLATOR ROW PLUS
  - B.2. USING A FLASHLIGHT, INSPECT DOWN THE ISOLATOR ROW PLUS THROUGH OUTLET PIPE
    - i) MIRRORS ON POLES OR CAMERAS MAY BE USED TO AVOID A CONFINED SPACE ENTRY
    - ii) FOLLOW OSHA REGULATIONS FOR CONFINED SPACE ENTRY IF ENTERING MANHOLE
  - B.3. IF SEDIMENT IS AT, OR ABOVE, 3" (80 mm) PROCEED TO STEP 2. IF NOT, PROCEED TO STEP 3.

STEP 2) CLEAN OUT ISOLATOR ROW PLUS USING THE JETVAC PROCESS
- A. A FIXED CULVERT CLEANING NOZZLE WITH REAR FACING SPREAD OF 45" (1.1 m) OR MORE IS PREFERRED
- B. APPLY MULTIPLE PASSES OF JETVAC UNTIL BACKFLUSH WATER IS CLEAN
- C. VACUUM STRUCTURE SUMP AS REQUIRED

STEP 3) REPLACE ALL COVERS, GRATES, FILTERS, AND LIDS; RECORD OBSERVATIONS AND ACTIONS.

STEP 4) INSPECT AND CLEAN BASINS AND MANHOLES UPSTREAM OF THE STORMTECH SYSTEM.

NOTES

1. INSPECT EVERY 6 MONTHS DURING THE FIRST YEAR OF OPERATION. ADJUST THE INSPECTION INTERVAL BASED ON PREVIOUS OBSERVATIONS OF SEDIMENT ACCUMULATION AND HIGH WATER ELEVATIONS AS APPROVED BY THE CITY OF ZANESVILLE.
2. CONDUCT JETTING AND VACTORING ANNUALLY OR WHEN INSPECTION SHOWS THAT MAINTENANCE IS NECESSARY.
3. INSPECTION AND MAINTENANCE REPORTS SHALL BE SUBMITTED TO THE CITY OF ZANESVILLE, ENGINEERING DEPARTMENT WITHIN 30 DAYS OF INSPECTION AND/OR MAINTENANCE FOR THE LIFE OF THE SYSTEM.

3 MC-7200 ISOLATOR ROW PLUS DETAIL

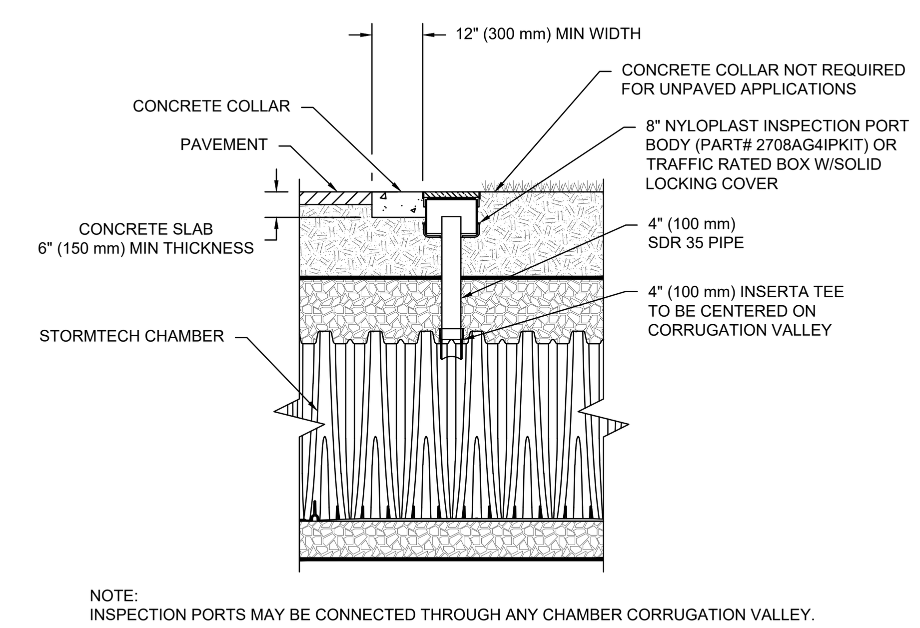

NOTE:
INSPECTION PORTS MAY BE CONNECTED THROUGH ANY CHAMBER CORRUGATION VALLEY.

4 4" PVC INSPECTION PORT DETAIL (MC SERIES CHAMBER)

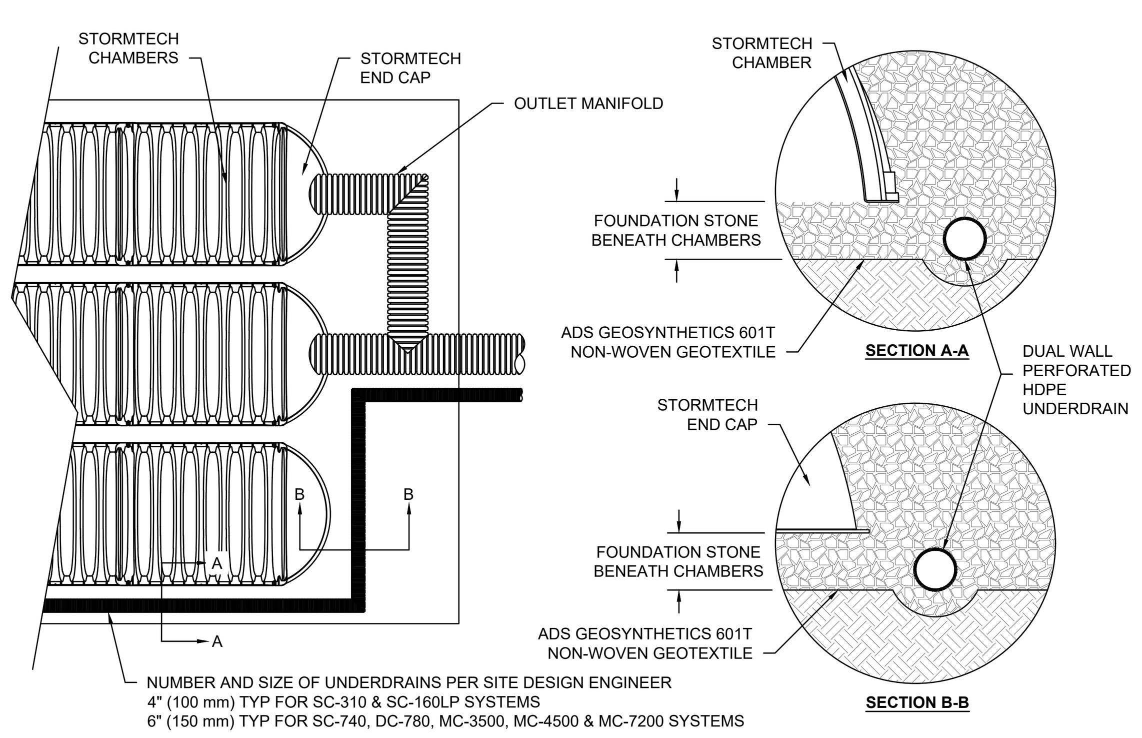

5 UNDERDRAIN DETAIL

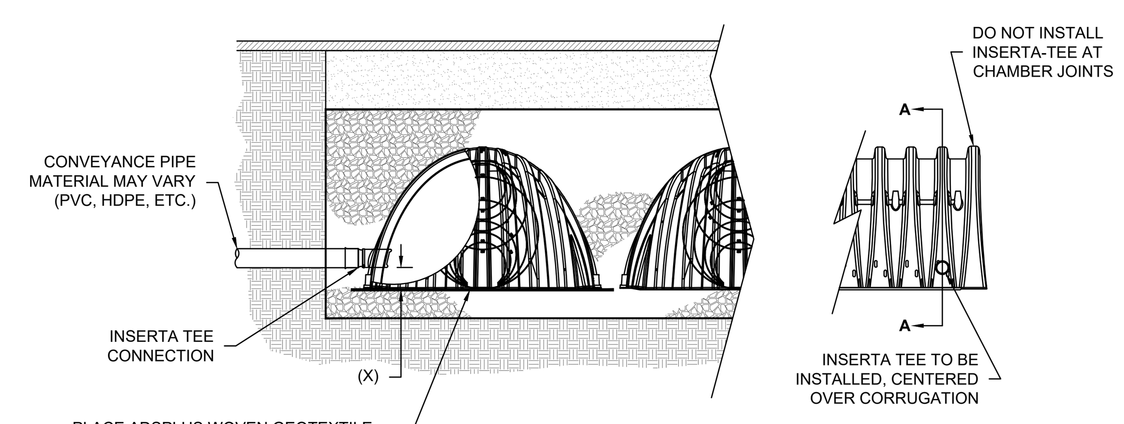

CHAMBER	MAX DIAMETER OF INSERTA TEE	HEIGHT FROM BASE OF CHAMBER (X)
SC-310	6" (150 mm)	4" (100 mm)
SC-740	10" (250 mm)	4" (100 mm)
DC-780	10" (250 mm)	4" (100 mm)
MC-3500	12" (300 mm)	6" (150 mm)
MC-4500	12" (300 mm)	8" (200 mm)
MC-7200	12" (300 mm)	8" (200 mm)
INSERTA TEE FITTINGS AVAILABLE FOR SDR 26, SDR 35, SCH 40 IPS GASKETED & SOLVENT WELD, N-12, HP STORM, C-900 OR DUCTILE IRON		

NOTE:
PART NUMBERS WILL VARY BASED ON INLET PIPE MATERIALS. CONTACT STORMTECH FOR MORE INFORMATION.

6 INSERTA-TEE SIDE INLET DETAIL

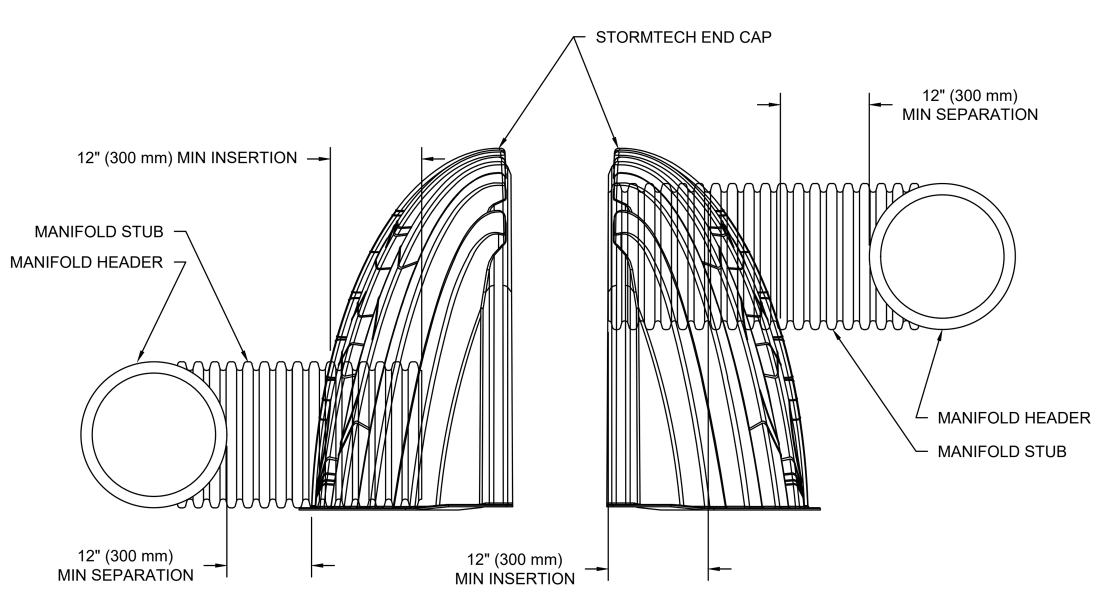

NOTE: MANIFOLD STUB MUST BE LAID HORIZONTAL FOR A PROPER FIT IN END CAP OPENING.

7 MC-SERIES END CAP INSERTION DETAIL

MC-7200 STORMTECH CHAMBER SPECIFICATIONS

1. CHAMBERS SHALL BE STORMTECH MC-7200.
2. CHAMBERS SHALL BE ARCH-SHAPED AND SHALL BE MANUFACTURED FROM VIRGIN, IMPACT-MODIFIED POLYPROPYLENE COPOLYMERS.
3. CHAMBERS SHALL MEET THE REQUIREMENTS OF ASTM F2418-16a, "STANDARD SPECIFICATION FOR POLYPROPYLENE (PP) CORRUGATED WALL STORMWATER COLLECTION CHAMBERS" CHAMBER CLASSIFICATION 60x101.
4. CHAMBER ROWS SHALL PROVIDE CONTINUOUS, UNOBSTRUCTED INTERNAL SPACE WITH NO INTERNAL SUPPORTS THAT WOULD IMPEDE FLOW OR LIMIT ACCESS FOR INSPECTION.
5. THE STRUCTURAL DESIGN OF THE CHAMBERS, THE STRUCTURAL BACKFILL, AND THE INSTALLATION REQUIREMENTS SHALL ENSURE THAT THE LOAD FACTORS SPECIFIED IN THE AASHTO LRFD BRIDGE DESIGN SPECIFICATIONS, SECTION 12.12, ARE MET FOR: 1) LONG-DURATION DEAD LOADS AND 2) SHORT-DURATION LIVE LOADS, BASED ON THE AASHTO DESIGN TRUCK WITH CONSIDERATION FOR IMPACT AND MULTIPLE VEHICLE PRESENCES.
6. CHAMBERS SHALL BE DESIGNED, TESTED AND ALLOWABLE LOAD CONFIGURATIONS DETERMINED IN ACCORDANCE WITH ASTM F2787, "STANDARD PRACTICE FOR STRUCTURAL DESIGN OF THERMOPLASTIC CORRUGATED WALL STORMWATER COLLECTION CHAMBERS". LOAD CONFIGURATIONS SHALL INCLUDE: 1) INSTANTANEOUS (<1 MIN) AASHTO DESIGN TRUCK LIVE LOAD ON MINIMUM COVER 2) MAXIMUM PERMANENT (75-YR) COVER LOAD AND 3) ALLOWABLE COVER WITH PARKED (1-WEEK) AASHTO DESIGN TRUCK.
7. REQUIREMENTS FOR HANDLING AND INSTALLATION:
   - TO MAINTAIN THE WIDTH OF CHAMBERS DURING SHIPPING AND HANDLING, CHAMBERS SHALL HAVE INTEGRAL, INTERLOCKING STACKING LUGS.
   - TO ENSURE A SECURE JOINT DURING INSTALLATION AND BACKFILL, THE HEIGHT OF THE CHAMBER JOINT SHALL NOT BE LESS THAN 3".
   - TO ENSURE THE INTEGRITY OF THE ARCH SHAPE DURING INSTALLATION, a) THE ARCH STIFFNESS CONSTANT SHALL BE GREATER THAN OR EQUAL TO 450 LBS/IN/IN. THE ASC IS DEFINED IN SECTION 6.2.8 OF ASTM F2418 AND b) TO RESIST CHAMBER DEFORMATION DURING INSTALLATION AT ELEVATED TEMPERATURES (ABOVE 73° F / 23° C), CHAMBERS SHALL BE PRODUCED FROM REFLECTIVE GOLD OR YELLOW COLORS.
8. ONLY CHAMBERS THAT ARE APPROVED BY THE SITE DESIGN ENGINEER WILL BE ALLOWED. UPON REQUEST BY THE SITE DESIGN ENGINEER OR OWNER, THE CHAMBER MANUFACTURER SHALL SUBMIT A STRUCTURAL EVALUATION FOR APPROVAL BEFORE DELIVERING CHAMBERS TO THE PROJECT SITE AS FOLLOWS:
   - THE STRUCTURAL EVALUATION SHALL BE SEALED BY A REGISTERED PROFESSIONAL ENGINEER.
   - THE STRUCTURAL EVALUATION SHALL DEMONSTRATE THAT THE SAFETY FACTORS ARE GREATER THAN OR EQUAL TO 1.95 FOR DEAD LOAD AND 1.75 FOR LIVE LOAD, THE MINIMUM REQUIRED BY ASTM F2787 AND BY SECTIONS 3 AND 12.12 OF THE AASHTO LRFD BRIDGE DESIGN SPECIFICATIONS FOR THERMOPLASTIC PIPE.
   - THE TEST DERIVED CREEP MODULUS AS SPECIFIED IN ASTM F2418 SHALL BE USED FOR PERMANENT DEAD LOAD DESIGN EXCEPT THAT IT SHALL BE THE 75-YEAR MODULUS USED FOR DESIGN.
9. CHAMBERS AND END CAPS SHALL BE PRODUCED AT AN ISO 9001 CERTIFIED MANUFACTURING FACILITY.

IMPORTANT - NOTES FOR THE BIDDING AND INSTALLATION OF MC-7200 CHAMBER SYSTEM

1. STORMTECH MC-7200 CHAMBERS SHALL NOT BE INSTALLED UNTIL THE MANUFACTURER'S REPRESENTATIVE HAS COMPLETED A PRE-CONSTRUCTION MEETING WITH THE INSTALLERS.
2. STORMTECH MC-7200 CHAMBERS SHALL BE INSTALLED IN ACCORDANCE WITH THE "STORMTECH MC-7200 CONSTRUCTION GUIDE".
3. CHAMBERS ARE NOT TO BE BACKFILLED WITH A DOZER OR EXCAVATOR SITUATED OVER THE CHAMBERS. STORMTECH RECOMMENDS 3 BACKFILL METHODS:
   - STONESHOOTER LOCATED OFF THE CHAMBER BED.
   - BACKFILL AS ROWS ARE BUILT USING AN EXCAVATOR ON THE FOUNDATION STONE OR SUBGRADE.
   - BACKFILL FROM OUTSIDE THE EXCAVATION USING A LONG BOOM HOE OR EXCAVATOR.
4. THE FOUNDATION STONE SHALL BE LEVELED AND COMPACTED PRIOR TO PLACING CHAMBERS.
5. JOINTS BETWEEN CHAMBERS SHALL BE PROPERLY SEATED PRIOR TO PLACING STONE.
6. MAINTAIN MINIMUM - 9" (230 mm) SPACING BETWEEN THE CHAMBER ROWS.
7. INLET AND OUTLET MANIFOLDS MUST BE INSERTED A MINIMUM OF 12" (300 mm) INTO CHAMBER END CAPS.
8. EMBEDMENT STONE SURROUNDING CHAMBERS MUST BE A CLEAN, CRUSHED, ANGULAR STONE MEETING THE AASHTO M43 DESIGNATION OF #3 OR #4.
9. STONE SHALL BE BROUGHT UP EVENLY AROUND CHAMBERS SO AS NOT TO DISTORT THE CHAMBER SHAPE. STONE DEPTHS SHOULD NEVER DIFFER BY MORE THAN 12" (300 mm) BETWEEN ADJACENT CHAMBER ROWS.
10. STONE MUST BE PLACED ON THE TOP CENTER OF THE CHAMBER TO ANCHOR THE CHAMBERS IN PLACE AND PRESERVE ROW SPACING.
11. THE CONTRACTOR MUST REPORT ANY DISCREPANCIES WITH CHAMBER FOUNDATION MATERIAL BEARING CAPACITIES TO THE SITE DESIGN ENGINEER.
12. ADS RECOMMENDS THE USE OF "FLEXSTORM CATCH IT" INSERTS DURING CONSTRUCTION FOR ALL INLETS TO PROTECT THE SUBSURFACE STORMWATER MANAGEMENT SYSTEM FROM CONSTRUCTION SITE RUNOFF.

NOTES FOR CONSTRUCTION EQUIPMENT

1. STORMTECH MC-7200 CHAMBERS SHALL BE INSTALLED IN ACCORDANCE WITH THE "STORMTECH MC-7200 CONSTRUCTION GUIDE".
2. THE USE OF EQUIPMENT OVER MC-7200 CHAMBERS IS LIMITED:
   - NO EQUIPMENT IS ALLOWED ON BARE CHAMBERS.
   - NO RUBBER TIRED LOADER, DUMP TRUCK, OR EXCAVATORS ARE ALLOWED UNTIL PROPER FILL DEPTHS ARE REACHED IN ACCORDANCE WITH THE "STORMTECH MC-7200 CONSTRUCTION GUIDE".
   - WEIGHT LIMITS FOR CONSTRUCTION EQUIPMENT CAN BE FOUND IN THE "STORMTECH MC-7200 CONSTRUCTION GUIDE".
3. FULL 36" (900 mm) OF STABILIZED COVER MATERIALS OVER THE CHAMBERS IS REQUIRED FOR DUMP TRUCK TRAVEL OR DUMPING.

USE OF A DOZER TO PUSH EMBEDMENT STONE BETWEEN THE ROWS OF CHAMBERS MAY CAUSE DAMAGE TO CHAMBERS AND IS NOT AN ACCEPTABLE BACKFILL METHOD. ANY CHAMBERS DAMAGED BY USING THE "DUMP AND PUSH" METHOD ARE NOT COVERED UNDER THE STORMTECH STANDARD WARRANTY.

CONTACT STORMTECH AT 1-888-892-2694 WITH ANY QUESTIONS ON INSTALLATION REQUIREMENTS OR WEIGHT LIMITS FOR CONSTRUCTION EQUIPMENT.

CHADAN ENGINEERING, INC.
171 West Main Street
P.O. Box 695
St. Clairsville, Ohio 43950
Office: 740.449.2194
chadanengineering.com

CHARLES M. GARVICK REGISTERED # 014858 STATE OF WEST VIRGINIA PROFESSIONAL ENGINEER

FOR PERMIT

CLIENT:
Don Steen
Commercial Contract Services, LLC
1199 N. Memorial Drive, Suite 361
Lancaster, Ohio 43130
C: 740.438.2914

ELM GROVE DODGE CHRYSLER & JEEP
Parking Lot Expansion
2538 National Road,
Wheeling, West Virginia 26003

ISSUE	REVISIONS	DATE

DATE ISSUED: 03-05-2026
DRAWN: RLL CHECKED: CMG

NOTES:

ADS Storm Chamber Details

C202

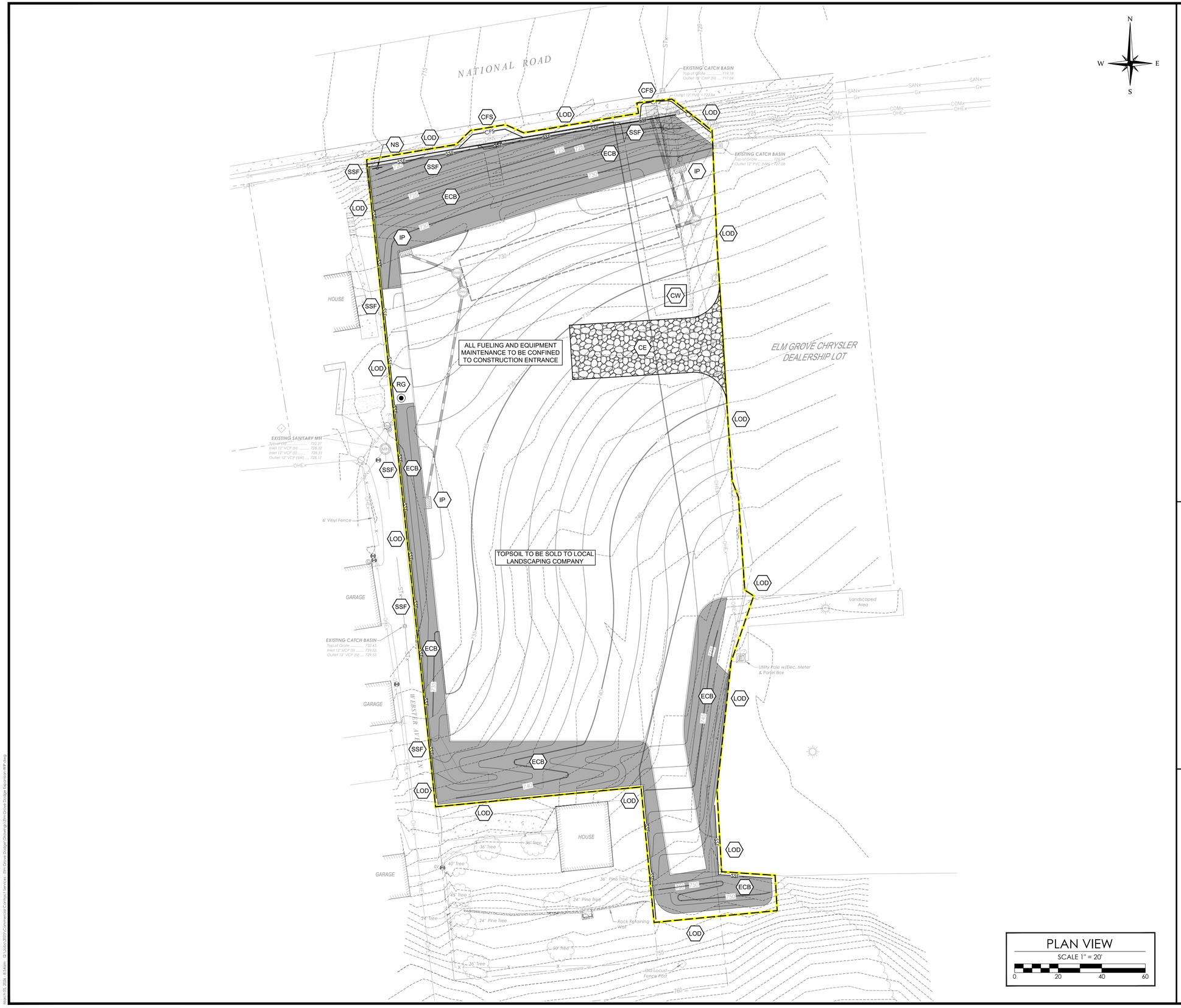

PLAN VIEW
SCALE 1" = 20'
0 20 40 60

LEGEND

- Property Boundary
- Right of Way Limits
- Property Monument - Iron Pin Set
- Property Monument - Iron Pin Found
- Existing Grade Contour (Index)
- Existing Grade Contour (Intermediate
- Existing Grade Spot Elevation
- Existing Fence - Chain Link
- Existing Fence - Wood
- Existing Light Pole
- Existing Utility Pole
- Existing Guy Wire
- Existing Overhead Communications
- Existing Overhead Electric
- Existing Underground Electric
- Existing Electric Box
- Existing Electric Meter
- Existing Gas Line
- Existing Gas Line Marker
- Existing Gas Valve
- Existing Sanitary Manhole
- Existing Sanitary Sewer
- Existing Sanitary Cleanout
- Existing Storm Sewer
- Existing Storm Catch Basin
- Existing Water Line
- Existing Water Valve
- Existing Water Meter
- Existing Hydrant
- Existing Sign
- Existing Mailbox
- Existing Post, Gate Post
- Existing Tree
- Existing Asphalt Surface
- Existing Aggregate/Gravel Surface
- Existing Concrete
- Existing Surface To Be Demolished
- Proposed Grade Contour (Index)
- Proposed Grade Contour (Intermediate)
- Proposed Grade Spot Elevation
- Proposed Storm Sewer Structure
- Proposed Storm Sewer Manhole
- Proposed Storm Sewer Piping
- Proposed Concrete Surface
- Proposed Asphalt Pavement

SWPPP LEGEND

CE	Construction Entrance	1 C301	
SSF	SMART Silt Fence, or Equal	2 C301	SSF
IP	Inlet Protection	3 C301	
CW	Concrete Wash	4 C301	
NS	Notice Sign	5 C301	
CFS	Compost Filter Sock	6 C301	CFS
ECB	Erosion Control Blanket	7 C301	
RG	Rain Gauge		
LOD	Limit of Disturbance = 1.20 Acres		

Notes: No solid or toxic wastes are anticipated to be found at this location. In the event that hazardous materials are encountered,they will be collected and disposed at a State approved disposal facility. All work will be in accordance with State of Ohio standard procedures.

NO CHEMICALS, FERTILIZERS, FUEL, OIL, GREASE, DRUMS, OR OTHER POTENTIAL CONTAMINATES WILL BE STORED AT THIS SITE.

BMP CONSTRUCTION SEQUENCE

The following is a procedure for the implementation of the erosion and sediment controls. Each step in this sequence shall be completed before commencing the next step. Each BMP shall be installed according to the details shown on the plans.

1. Construct stabilized construction access for the site.
2. Install perimeter controls.
3. Demolish existing retaining walls, sidewalks, and aggregate drives as needed for new work.
4. Grade site to subgrade elevations. Lawn areas that are brought to final grade shall be stabilized, seeded and mulched with 14 days. New parking areas to be stoned within 4 days of reaching subgrade.
5. Install concrete wash out.
6. Install storm sewer system and structures, including underground stormwater detention system and concrete pad at pipe outlet.
7. Install concrete curbing.
8. Install asphalt pavement.
9. Final grading of site and topsoil redistribution.
10. Final seeding and mulching to stabilize site.
11. Remove BMPs only after 70% of the site has been stabilized with a minimum of 70% vegetated cover.

CHADAN ENGINEERING, INC.
171 West Main Street
P.O. Box 695
St. Clairsville, Ohio 43950
Office: 740.449.2194
chadanengineering.com

CHARLES M. GARVICK
REGISTERED
014858
STATE OF WEST VIRGINIA
PROFESSIONAL ENGINEER
FOR PERMIT

CLIENT:
Don Steen
Commercial Contract Services, LLC
1199 N. Memorial Drive, Suite 361
Lancaster, Ohio 43130
C: 740.438.2914

ELM GROVE DODGE CHRYSLER & JEEP
Parking Lot Expansion
2538 National Road,
Wheeling, West Virginia 26003

#	ISSUE	REVISIONS	DATE

DATE ISSUED: 03-05-2026
DRAWN: RLL CHECKED: CMG

NOTES:

Stormwater Pollution Prevention Plan

C300

Elm Grove Dodge Chrysler & Jeep - Parking Lot Expansion

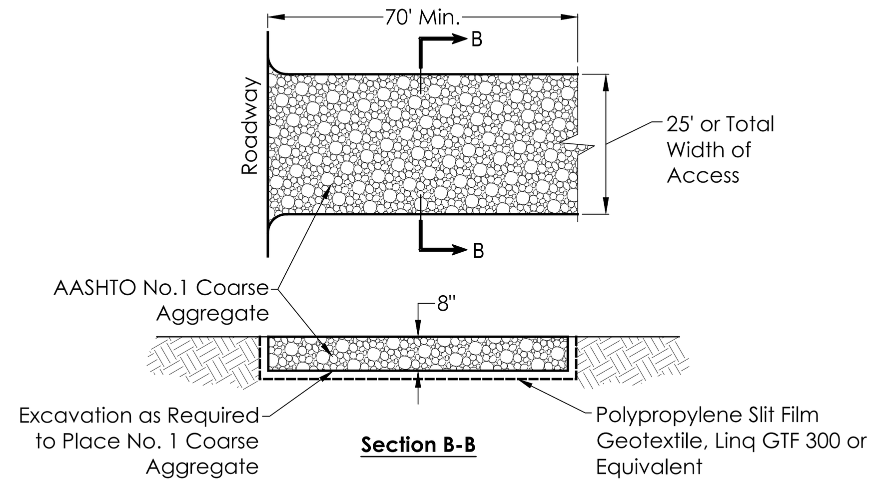

Section B-B

1 CONSTRUCTION ENTRANCE
NOT TO SCALE

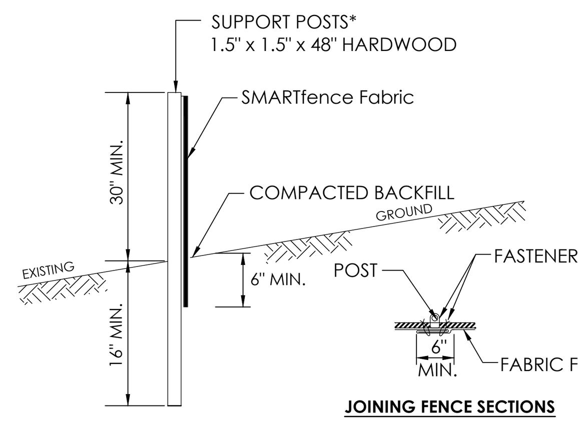

JOINING FENCE SECTIONS

*** Posts spaced @ 6' max.**

Filter Fabric Fence must be placed at existing level grade. Both ends of the barrier must be extended at least 8 feet up slope at 45 degrees to the main barrier alignment.

Sediment must be removed when accumulations reach 1/2 the above ground height of the fence.

Use SMARTfence 36 or equal.

2 SMARTFENCE 36 SILT FENCE
NOT TO SCALE

Installation and Maintenance Guidelines

Installation: Remove the grate from catch basin. If using optional oil absorbents; place absorbent pillow in unit. Stand the grate on end. Move the top lifting straps out of the way and place the grate into the Dandy Bag II so that the grate is below the top straps and above the lower straps. Holding the lifting devices, insert the grate into the inlet.

Maintenance: Remove all accumulated sediment and debris from vicinity of unit after each storm event. After each storm event and at regular intervals, look into the Dandy Bag II. If the containment area is more than ⅓ full of sediment, the unit must be emptied. To empty unit, lift the unit out of the inlet using the lifting straps and remove the grate. If using optional oil absorbents; replace absorbent when near saturation.

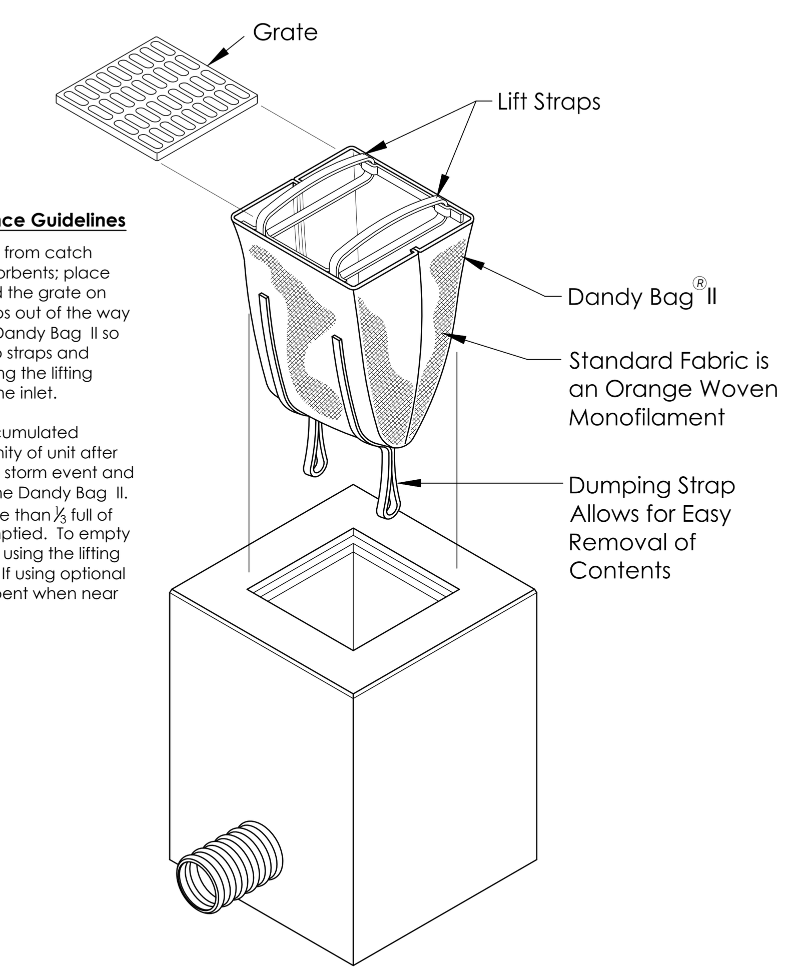

3 INLET PROTECTION
NOT TO SCALE

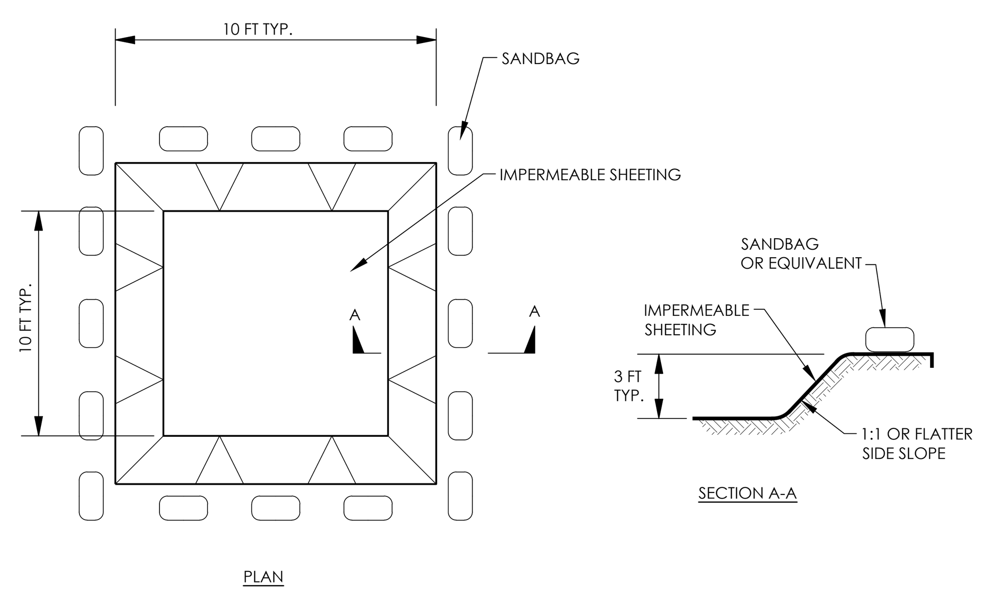

4 CONCRETE WASHOUT
NOT TO SCALE

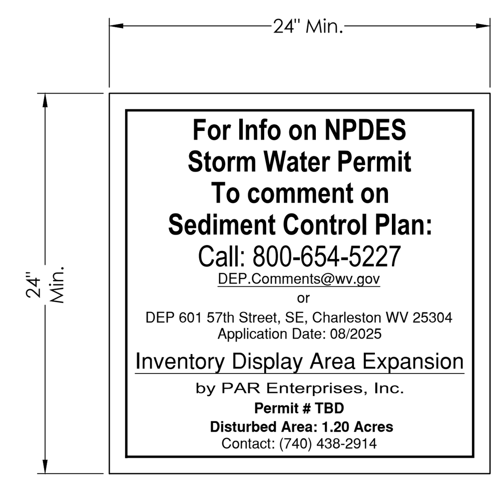

Notes:

1. *The sign shall be 24" x 24" minimum with 1.6" and 0.8" lettering.*
2. *The sign shall be installed within 24 hours of the submission of the site registration application form.*

5 PUBLIC NOTICE SIGN
NOT TO SCALE

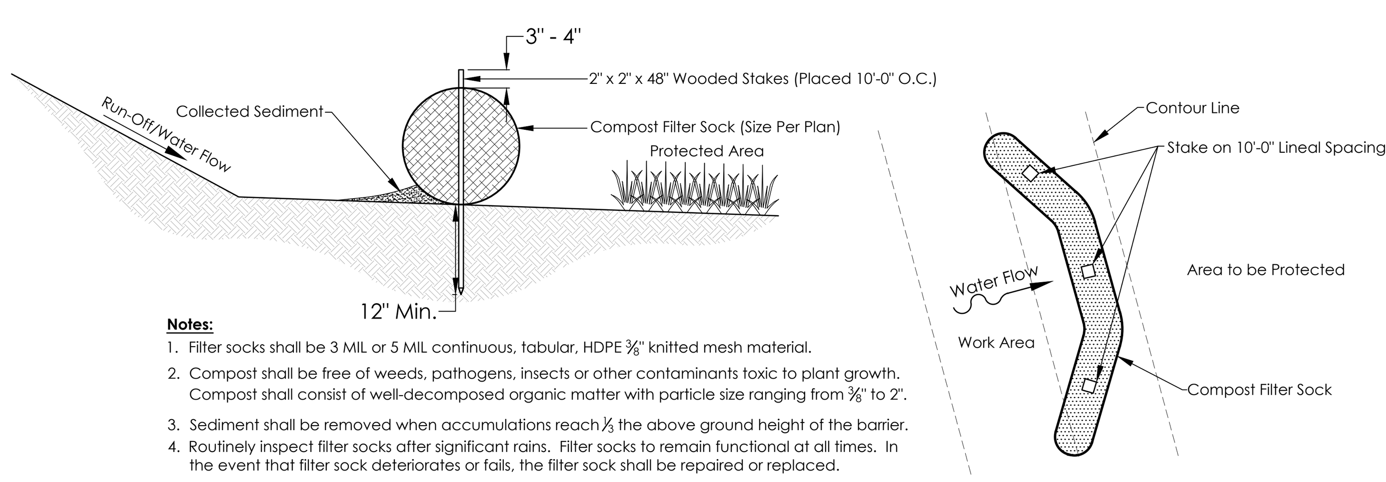

Notes:

1. Filter socks shall be 3 MIL or 5 MIL continuous, tabular, HDPE ⅜" knitted mesh material.
2. Compost shall be free of weeds, pathogens, insects or other contaminants toxic to plant growth. Compost shall consist of well-decomposed organic matter with particle size ranging from ⅜" to 2".
3. Sediment shall be removed when accumulations reach ½ the above ground height of the barrier.
4. Routinely inspect filter socks after significant rains. Filter socks to remain functional at all times. In the event that filter sock deteriorates or fails, the filter sock shall be repaired or replaced.

Typical Section **Plan View**

6 18" COMPOST FILTER SOCK
NOT TO SCALE

Slope Installation

For slopes steeper than 3:1 (H:V)

Step 1 - Site Preparation
Prepare site to design profile and grade. Remove debris, rocks, clods, etc.. Ground surface should be smooth prior to installation to ensure blanket remains in contact with slope.

Step 2 - Seeding
Seeding of site should be conducted to design requirements or to follow local or state seeding requirements as necessary.

Step 3 - Staple Selection
At a minimum, 6" long by 1" crown, 11 gauge staples are to be used to secure the blanket to the ground surface. Installation in rocky, sandy or other loose soil may require longer staples.

Step 4 - Excavate Anchor Trench and Secure Blanket
Excavate a trench along the top of the slope to secure the upstream end of the blanket. The trench should run along the length of the installation, be 6" wide and 6" deep. Staple blanket along bottom of trench, fill with compacted soil, overlap blanket towards toe of slope and secure with row of staples (shown in Figures A, E and F).

Step 5 - Secure Body of Blanket
Roll blanket down slope from anchor trench. Staple body of blanket following the pattern shown in Figure D. Leave end of blanket unstapled to allow for overlap shown in Figure B. Place downstream blanket underneath upstream blanket to from shingle pattern. Staple seam as shown in Figure E. Secure downstream blanket with stapling pattern shown in Figure D. Stapling pattern shown in Figure D reflects minimum staples to be used. More staples may be required to ensure blanket is sufficiently secured to resist mowers and foot traffic and to ensure blanket is in contact with soil surface over the entire area of blanket. Further, critical points require additional staples. Critical points are identified in Figure G.

Step 6 - Continue Along Slope - Complete Installation
Overlap adjacent blankets as shown in Figure C and repeat Step 5. Secure toe of slope using stapling pattern shown in Figure E. Secure edges of installation by stapling at 1.0' intervals along the terminal edge.

***Approximately 120 Staples per Roll (8' or 4' width) Required - Drawings Not to Scale 8' Wide Blanket Shown**

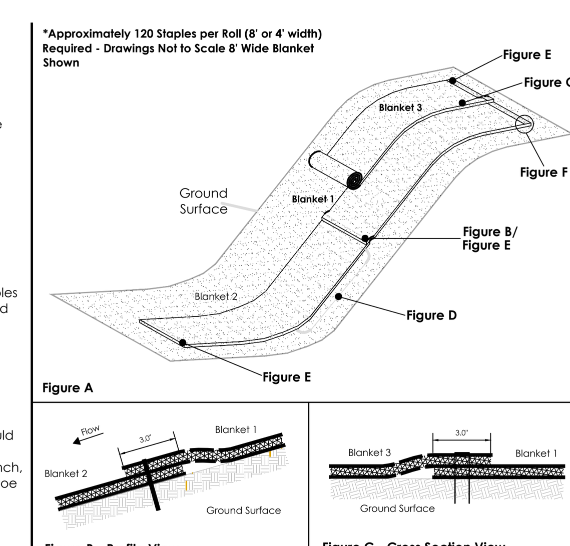

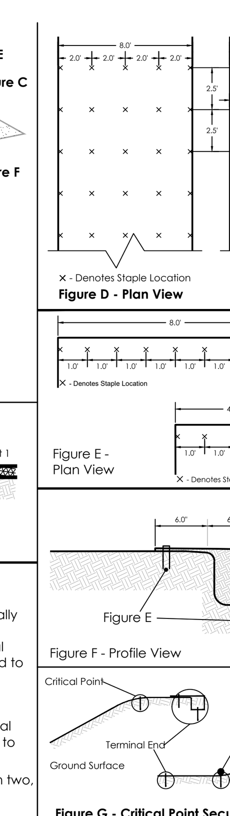

Product Application/Equivalency Specifications

Excel SD-3 is produced by Western Excelsior and consists of an extended term Rolled Erosion Control Product (RECP) comprised of an excelsior matrix mechanically (stitch) bound between two, UV stabilized, heavy duty synthetic nets (top and bottom). The expected longevity of Excel SD-3 is approximately 18 months (actual longevity dependent on field and climatic conditions). Excel SD-3 is manufactured to include physical properties sufficient to provide the intended longevity and performance. Product specifications may be found on document WE_EXCEL_SD3_SPEC and performance information may be found on document WE_EXCEL_SD3_PERF. All documents are available from Western Excelsior Technical Support or www.westernexcelsior.com. Additional to above, equivalent products to Excel SD-3 must meet identical criteria as Excel SD-3 as follows:

1. Consist of machine produced, weed and debris free excelsior bound between two, UV stabilized, heavy duty synthetic nets (top and bottom).
2. Sufficient tensile strength, thickness and coverage to maintain integrity during installation and ensure material performance.
3. Listing within AASHTO NTPEP database.
4. Meet ECTC specification for category 3B product.

NOTE: In lieu of Erosion Control Blanket, Flexterra®, or equal, hydroseed may be used on slopes 3H:1V and steeper.

7 EROSION CONTROL BLANKET
NOT TO SCALE

STORM WATER POLLUTION PREVENTION PLAN - MAINTENANCE NOTES

Construction Entrance: The entrance shall be maintained in a condition that will prevent tracking or flow of mud onto public rights-of-way. This may require periodic top dressing with additional stone or the washing and reworking of existing stone as conditions demand and repair and/or clean out of any structures used to trap sediment. All materials spilled, dropped, washed or tracked from vehicles onto roadways or into storm drains must be removed immediately. The use of water trucks to remove material dropped, washed or tracked onto roadways will not be permitted under any circumstances.

SMART Silt Fence: Remove sediment collected at the base of the sock when sediment levels reach 1/3 of the exposed height. Where the filter sock deteriorates or fails, it will be repaired or replaced with a more effective alternative. During removal, the filter sock will be dispersed on-site in such a way as to facilitate and not obstruct seeding.

Filter Sock: Remove sediment collected at the base of the sock when sediment levels reach 1/3 of the exposed height. Where the filter sock deteriorates or fails, it will be repaired or replaced with a more effective alternative. During removal, the filter sock will be dispersed on-site in such a way as to facilitate and not obstruct seeding.

Inlet Protection: Once a bag reaches 1/3 full of sediment, it is to be removed, emptied, cleaned and reinstalled. Bags that are worn or torn will be replaced with a new bag.

Erosion Control Blanket: Basic monitoring should consist of visual inspections to determine mat integrity and attachment performance. Rill development beneath the mat or edge lifting is evidence of inadequate attachment. Until vegetation is fully established, the ground surface should be inspected for signs of rill or gully erosion below the matting. Any signs of erosion, tearing of the matting or areas where the matting is no longer anchored firmly to the ground should be repaired. Repair any damaged areas immediately by restoring soil to finished grade, re-applying soil amendments and seed, and replacing the erosion control blanket. Additional staking and trenching can be employed to correct defects. Recently placed mats may be replaced, but once vegetation becomes established, replacement is not a reasonable option unless large failures have occurred. If the erosion blanket are vegetated, the vegetation should be watered as needed. Getting grass established as quickly as possible is very important.

Concrete Wash: Prepare soil base free of rocks or other debris that may cause tears or holes in the liner. For liner, use 10 Mil or thicker UV resistant, impermeable sheeting, free of holes and tears or other defects that compromise impermeability of the material. Provide a sign for the washout in close proximity to the facility. Keep concrete washout structure water tight. Replace impermeable liner if damaged (e.g., ripped or punctured). Empty or replace washout structure that is 75 percent full, and dispose of accumulated material properly. Do not reuse plastic liner. Wet-vacuum stored liquids that have not evaporated and dispose of in an approved manner. Prior to forecasted rainstorms, remove liquids or cover structure to prevent overflows. Remove hardened solids, whole or broken up, for disposal or recycling. Maintain runoff diversion around excavated washout structure until structure is removed.

Documentation: A copy of all reports shall be kept on site and be available for review by the WVDEP when requested. The contractor may obtain the services of a third party consultant to inspect the site. The contractor would be responsible for informing the consultant of daily rainfall records.

BEST MANAGEMENT PRACTICES:

Best management practices (BMPs) shall include stabilized construction entrances at each home site, compost filter sock, and timely planting of ground cover.

Once slopes are brought to final grade, they will be seeded, fertilized and mulched within 4 days. Where construction activity will resume on a portion of the site within 14 days from when activities ceased (e.g., the total time that construction activity it temporarily halted is less than 14 days), then stabilization measures do not have to be initiated on that portion of the site by the 4th day after construction activities have temporarily ceased. During dry periods, recently seeded areas will be watered to enhance growth. Permanent seeding shall be done between the dates of April 1 to May 15 and August 15 to November 1.

Seeding Applications:

1. Refer to the following table for seeding applications and sowing rates:

Permanent Seeding:

Seed Mix	Seeding Rate *(pound/acre)*
General Use Creeping Red Fescue	20-40
Domestic Ryegrass	10-20
Kentucky Bluegrass	10-20
Tall Fescue	40
Dwarf Fescue	40

Note: Other approved seed species may be substituted.

Permanent Stabilization

Area Requiring Permanent Stabilization	Time Frame to Apply Erosion Controls
Any area that will lie dormant for one year or more.	Within 4 days of the most recent disturbance.
Any area within 50 feet of a stream or a riparian setback area and at final grade.	Within 2 days of reaching final grade.
Any area at final grade.	Within 4 days of reaching final grade within that area.

Temporary Stabilization

Area Requiring Temporary Stabilization	Time Frame to Apply Erosion Controls
Any disturbed area within 50 feet of a stream or a riparian setback area and not at final grade.	Within 2 days of the most recent disturbance if that area will remain idle for more than 14 days.
For all construction activities, any disturbed area, including soil stockpiles that will be dormant for more than 14 days but less than one year.	Within 4 days of the most recent disturbance within the area.
Disturbed areas that will be idle over winter.	Prior to November 1.
Note: Where vegetative stabilization techniques may cause structural instability or are otherwise unobtainable, alternative stabilization techniques must be employed. These techniques may include mulching or erosion matting.	

Topsoil shall be spread to a depth of at least 4", and raked free of all foreign material, to a uniform grade. Seed shall be sown at a rate of 4 pounds per thousand square feet. Fertilizer shall be applied at a rate of 10 pounds per thousand square feet. Straw mulch shall be applied at a rate of 3 tons per acre. Areas disturbed after planting shall be replanted as specified. The temporary seed mixture shall be used for periods other than stated above, and for materials stockpiled for a period of 20 days or more.

See additional mitigation requirements in Specifications.

MAINTENANCE PROGRAM

All sediment and erosion controls will be maintained on a regular basis until such time the site is stabilized, including landscaping and driveway installation. 70% uniform permanent vegetative cover over the lot must be established prior to removal of the erosion and sediment control devices

The minimum maintenance schedule will be to inspect all controls every 4 calendar days, and within 24 hours after any storm event greater than 0.25 inches per 24 hours period. Any required repairs shall be made immediately.

WASTE CONTROL

Construction debris and waste will be deposited in dumpsters and removed from the site on a regular basis. Temporary sanitary facilities will be maintained on site throughout the construction period. A temporary wash pit for concrete chutes will be maintained at each build-site. Any fuel tanks maintained on site shall be within a lined pit with a capacity equal to the fuel tank capacity plus 10%.

LONG-TERM MAINTENANCE & INSPECTION

RESPONSIBILITY:

The Owner shall be responsible for the routine maintenance and repair of the stormwater management practices.

The Owner shall retain ongoing inspection and maintenance responsibilities for these private storm water components and BMP's water quality features outside the public right-of-way. Inspection checklists are included and shall be incorporated in an inspection log to be kept by the Owner.

POST-CONSTRUCTION MAINTENANCE REQUIREMENTS:

Curb Inlets: All stormwater inlets shall be inspected quarterly. Any sediment and debris shall be removed and properly disposed according to all regulatory agencies. Any damage to the structure or grate shall be repaired.

All inspections and repairs shall be recorded and kept on site.

CHADAN ENGINEERING, INC.
171 West Main Street
P.O.Box 695
St. Clairsville, Ohio 43950
Office: 740.449.2194
chadanengineering.com

CHARLES M. GARVICK REGISTERED # 014858 STATE OF WEST VIRGINIA PROFESSIONAL ENGINEER

FOR PERMIT

CLIENT:
Don Steen
Commercial Contract Services, LLC
1199 N. Memorial Drive, Suite 361
Lancaster, Ohio 43130
C: 740.438.2914

ELM GROVE DODGE CHRYSLER & JEEP
Parking Lot Expansion
2538 National Road,
Wheeling, West Virginia 26003

ISSUE	REVISIONS	DATE

DATE ISSUED: 03-05-2026
DRAWN: RLL CHECKED: CMG

NOTES:

Stormwater Pollution Prevention Details

C301